2018 Regulation Syllabus

Semester- III

18ESCIC31 - Discrete Mathematics and Graph Theory

Total Credits : 4 | **Total Contact Hours : 60**

L-T-P : 3-1-0 | **Contact Hours/week : 04**

IA Max Marks : 30 | **SEE Max Marks : 70**

Prerequisite : Engineering Mathematics | **Course Type : ES**

COURSE OBJECTIVES

1. To Understand the Mathematical structures and operations.
2. To Understand the principles used in the analysis of Algorithms.
3. To Learn how to develop Boolean Algebraic Expressions
4. To Study finite state machine

Module	COURSE CONTENTS	HOURS ALLOTTED
1	**INTRODUCTION TO GRAPH THEORY-1**: Definitions and Examples, Sub graphs, Complements and Graph Isomorphism, Vertex degree: Euler Trails and Circuits, Planar Graphs, Hamilton Paths and Cycles, Graph Coloring and Chromatic Polynomials.	**[12 Hours]**
2	**INTRODUCTION TO GRAPH THEORY-2**: Graph Coloring and Chromatic Polynomials **FUNDAMENTAL PRINCIPLES OF COUNTING, PROBABILITY AND MATHEMATICAL LOGIC - 1**: The Rules of Sum And Product, Permutations, Combinations: The Binomial Theorem, Combinations with RepetitionFirst Word on Probability	**[12 Hours]**
3	**FUNDAMENTAL PRINCIPLES OF COUNTING, PROBABILITY AND MATHEMATICAL LOGIC - 2**: The Axioms of Probability, Conditional Probability: Independence. **FUNCTIONS, PRINCIPLES OF INCLUSION AND EXCLUSION-1**: Cartesian Products and Relations, Functions: Plain and One-To-One, Onto Functions: Stirling Numbers of the Second Kind, Special Functions, The Pigeonhole Principle, Function Composition And Inverse Functions	**[12 Hours]**
4	The Principle Of Inclusion Exclusion, The Generalizations Of The	**[12 Hours]**

	Principles, Derangements – Nothing Is In Its Right Place, Rook Polynomials, Arrangements With Forbidden Positions.	
5	**GENERATING FUNCTIONS**: Introductory Examples, Definition & Examples: Calculational Techniques, Partitions Of Integers, The Exponential Generating Functions, And The Summation Operator. **RECURRENCE RELATIONS**: The First - Order Linear Recurrence Relation, The Second - Order Linear Homogeneous Recurrence Relations With Constant Coefficients, The Non-Homogeneous Recurrence Relations, The Method Of Generating Functions.	**[12 Hours]**

Textbook

1. "Discrete and Combinatorial Mathematics" by Ralph P Grimaldi, B.V Ramana, 5th Edition- Pearson Education- 2007

COURSE OUTCOMES (COs)

On completion of the course, students are able to :

18ESCIC31.1	Familiar with Mathematical structures and operations
18ESCIC31.2	Learn the principles used in the analysis of Algorithms.
18ESCIC31.3	Develop Boolean Algebraic Expressions
18ESCIC31.4	Learn the construction of databases of logical flows
18ESCIC31.5	Study finite state machine
18ESCIC31.6	Aquire ability to describe computer programs in a formal mathematical manner

Semester End Examination (SEE) Question paper pattern:

1. Eight questions are to be set covering entire syllabus. **(student shall answer 5 full question)**
   Q1 and Q2 are compulsory from UNIT 1 and UNIT 2 respectively.
   Q3 and Q4 from UNIT 3, Q5 and Q6 from UNIT 4, Q7 and Q8 from UNIT 5.
2. There shall be a maximum of three sub divisions under each question. Numerical problems shall be set wherever possible
3. Each question will carry **14 marks.**

18HSS03 - Economics for Engineers

Total Credits : 3 | **Total Contact Hours : 45**

L-T-P : 3-0-0 | **Contact Hours/week : 03**

IA Max Marks : 30 | **SEE Max Marks : 70**

Prerequisite : NA | **Course Type : HSS**

COURSE OBJECTIVES

1. To understand the economic concepts and global economical environment
2. To learn to Integrate theoretical knowledge with quantitative and qualitative evidences
3. To learn to apply the basic theories of economics in critical thinking and problem solving.

Module	COURSE CONTENTS	HOURS ALLOTTED
1	**Basic Principles of Economics** Nature and Scope of Economics- Basic Economic Problems: Scarcity and choices, resource allocation, marginal analysis, opportunity costs, production possibility curve, Externalities, Welfare Economics. **Methodology of Economics** Basics of microeconomics - Demand and Supply Analysis, equilibrium, elasticity; Markets – Perfect competition, Monopoly, Monopolistic, Oligopoly. Basics of macroeconomics - the circular flow models, national income analysis (GDP/GNP/NI/Disposable Income, Green GDP), and inflation trade cycles.	**[11 Hours]**
2	**Public Economics** Public economics, Role of Public and private sectors in economic development, Public Expenditure and Public Debt, Monetary and Fiscal Policy Tools & their impact on the economy	**[07 Hours]**
3	**Monetary Economics** Components of Monetary and Financial System, Capital and Debt Markets, Central Bank, Commercial Banks & their functions. Price Indices (WPI/CPI), Direct and Indirect Taxes. Budget.	**[07 Hours]**
4	**Elements of Business and forms of organizations** Theory of the Firm: production and production function -Cost &	**[10 Hours]**

	Cost Control Techniques - Types of Costs, Budgets, Break even Analysis, Capital Budgeting, Application of Linear Programming. Investment Analysis – NPV, ROI, IRR, Payback Period, Depreciation, Time value of money. Business Forecasting – Elementary techniques. Statements – Cash flow, Financial. Case Study Method.	
5	**Indian economy: Brief overview of post independence period** 5 year plans. Industrial policy in India; Recent trends in Indian industrial growth; MNCs and transfer of technology; Liberalization and privatization; Regional industrial growth in India; Post reform Growth, Structure of productive activity. **Employment, Migration and Urbanisation** Migration and Urbanization. Labour Market and Employment– Informal, Organized, Unorganized, Public, Private.	**[10 Hours]**

Text books and Reference Books:

1. Mankiw Gregory N.(2002), *Principles of Economics,* Thompson Asia

2. V. Mote, S. Paul, G. Gupta(2004), *Managerial Economics,* Tata McGraw Hill

3. Misra, S.K. and Puri (2009), *Indian Economy,* Himalaya

4. PareekSaroj (2003), *Textbook of Business Economics,* Sunrise Publishers

5. Ahluwalia, I.J. (1985), Industrial Growth in India, Oxford University Press, New Delhi

COURSE OUTCOMES (COs)

On completion of the course, students are able to:

18HSS03.1	Discuss the core concepts and methods, theories on economics and their application to problem solving (L2)
18HSS03.2	Discuss the causes of various economics problems and ways of addressing them, including interactions across local to global scales (L2)
18HSS03.3	Use the concepts and methodologies to analyze and understand the relationship and interactions between social and Economic activities (L3)
18HSS03.4	Develop the concepts and methodologies to analyze and understand the relationship and interactions between social and Economic activities (L6)
18HSS03.5	Describe the change , and adapt the change as it occurs, and to take the lead in creating change in the country's economic environment (L3)
18HSS03.6	Analyze cost and Revenue data and carry out decision making process to justify or reject Economic Basis (L5)

Semester End Examination (SEE) Question paper pattern:

1. Eight questions are to be set covering entire syllabus. **(student shall answer 5 full question)**
   Q1 and Q2 are compulsory from UNIT 1 and UNIT 2 respectively.
   Q3 and Q4 from UNIT 3, Q5 and Q6 from UNIT 4, Q7 and Q8 from UNIT 5.
2. There shall be a maximum of three sub divisions under each question. Numerical problems shall be set wherever possible
3. Each question will carry **14 marks.**

18CS32 - Data Structures and Algorithms

Total Credits : 4 | **Total Contact Hours : 60**

L-T-P :3-1-0 | **Contact Hours/week : 04**

IA Max Marks : 30 | **SEE Max Marks : 70**

Prerequisite : Problem Solving through Programming | **Course Type : Core**

COURSE OBJECTIVES

1. To Design correct programs to solve problems
2. To Choose the appropriate data structure and algorithm design method for a specified application
3. To Assess how the choice of data structures and algorithm design methods impacts the performance of programs
4. To Solve problems using data structures such as linear lists, stacks, queues, hash tables, binary trees, heaps, binary search trees, and graphs and writing programs for these solution

Module	COURSE CONTENTS	HOURS ALLOTTED
1	**Asymptotic Notations**: Big-oh, Big-omega, Theta, Little-oh, Little-omega notations, Properties of Asymptotic Notations **Analysis of Algorithms**: Analysis of Iterative and Recursive Algorithms, Abstract Data Types (ADTs)	**[11 Hours]**
2	**Stacks:** Array Implementation and Applications (conversion of infix to postfix, evaluation of postfix expression). **Queues**: Array Implementation, Operations and Applications of Queues, Circular Queues **Linked Lists**: Linked List Implementation of Stacks, Queues, Search and Update Operations on Varieties of Linked Lists [singly, doubly]	**[13 Hours]**
3	**Trees**: Introduction to Trees, Implementation of Trees, Binary Trees, Tree Traversals with an Application, Binary Search Trees (BSTs), Operations on BSTs. **Hashing:** Implementation of Dictionaries, Hash Function, Collisions in Hashing, Separate Chaining, Open Addressing, Analysis of Search Operations	**[12 Hours]**
4	**Priority Queues**: Priority Queue ADT, Binary Heap Implementation and Applications of Priority Queues **Sorting Algorithms**: Bucket sort, Radix sort, Merge Sort, Quick Sort, Heap Sort	**[12 Hours]**

5	**Graph Algorithms**: Graphs and their Representations, Graph Traversal Techniques: Breadth First Search (BFS) and Depth First Search (DFS) Applications of BFS and DFS, Minimum Spanning Trees (MST), Prim's and Kruskal's algorithms for MST, Dijkstra's Algorithm for Single Source Shortest Paths	**[12 Hours]**

Text books and Reference Books:

1. Mark Allen Weiss, *Data Structures and Algorithm Analysis in C++*, Third Edition, Pearson Education, 2006
2. Thomas H. Cormen, Charles E. Leiserson, Ronald L. Rivest and Clifford Stein, *Introduction to Algorithms*, Second Edition, PHI, 2009.
3. Ellis Horowitz, SartajSahni and SanguthevarRajasekaran, *Fundamentals of Computer Algorithms*,
   Second Edition, Universities Press, 2011.

COURSE OUTCOMES (COs)

On completion of the course, students are able to :

18CS32.1	Analyze the algorithms and data structures in terms of time and space complexity.
18CS32.2	Compare different linear, non-linear data structures, usage of the various concepts of data structure, algorithms and ADT.
18CS32.3	Implement Tree data structures and Hashing efficiently
18CS32.4	Compare the different sorting techniques and also implement priority queue
18CS32.5	Categorize the different graph algorithms and apply them in real world applications
18CS32.6	Evaluate the solutions of Engineering problems by applying different data structures and algorithms.

Semester End Examination (SEE) Question paper pattern:

1. Eight questions are to be set covering entire syllabus. **(student shall answer 5 full question)**
   Q1 and Q2 are compulsory from UNIT 1 and UNIT 2 respectively.
   Q3 and Q4 from UNIT 3, Q5 and Q6 from UNIT 4, Q7 and Q8 from UNIT 5.
2. There shall be a maximum of three sub divisions under each question. Numerical problems shall be set wherever possible
3. Each question will carry **14 marks.**

18CIC33 - Computer Organization and Architecture

Total Credits : 3 | **Total Contact Hours : 45**

L-T-P :3-0-0 | **Contact Hours/week : 03**

IA Max Marks : 30 | **SEE Max Marks : 70**

Prerequisite : Basics of Computers(Bridge Course), Digital Logic (Bridge Course) | **Course Type : Core**

COURSE OBJECTIVES

1. To Perform basic operations with signed and unsigned integers in decimal and binary number systems.
2. To Understand the basic concepts of the memory system
3. To Learn the Input Output organization
4. To Design a simple processor using any of the simulation tools

Module	COURSE CONTENTS	HOURS ALLOTTED
1	**BASIC STRUCTURE OF COMPUTERS:** Computer Types, Functional units, Basic operational concepts, Bus Structures, Software, Performance, Multiprocessors and multi computers, Data Representation- Fixed Point Representation, Floating – Point Representation	**[08 Hours]**
2	**REGISTER TRANSFER AND OPERATIONS:** Register Transfer language, Register Transfer, Bus and memory transfers, Arithmetic ,logic, shift operations, Arithmetic logic shift unit, Instruction codes, Computer Registers, Computer instructions, Instruction cycle.Memory instruction: Reference Instructions - Input – Output and Interrupt, STACK organization, Instruction formats, Addressing modes, DATA Transfer and manipulation, Program control, Reduced Instruction Set Computer.	**[10 Hours]**
3	**MICRO PROGRAMMED CONTROL:** Control memory, Address sequencing, microprogram example, design of control unit, hard wired control, Microprogrammed control. **COMPUTER ARITHMETIC:** Addition and subtraction, multiplication Algorithms, Division Algorithms, Floating – point Arithmetic operations, Decimal Arithmetic operations	**[10 Hours]**
4	**THE MEMORY SYSTEM :** Basic concepts, semiconductor RAM memories, Read-only memories, Cache memories, considerations, Virtual memories, secondary storage	**[08 Hours]**
5	**INPUT-OUTPUT ORGANIZATION:**	**[09**

	Peripheral Devices, Input-Output Interface, Asynchronous data transfer Modes of Transfer, Priority Interrupt, Direct memory Access, Input –Output Processor (IOP), Serial communication, Introduction to peripheral component, Introduction to standard serial communication protocols like RS232 **Case Study** 1. Wombat 1 CPU and JVM using CPUSim. *CPUSim is a freeware tool for simulation of Computer system 2. Pentium 4- Instruction cycle, Pipelining, Memory System 3. Athlon – General Architecture, Generations, Instruction set (3DNow), CPU Cache There can be THREE Case studies. Two on commercial processors and one on understanding/designing simple machine using simulation tool.	**Hours]**

Text Books:

1. Computer Organization – Carl Hamacher, ZvonksVranesic, SafeaZaky, Vth Edition, McGraw Hill.
2. Computer Systems Architecture – M.Moris Mano, IIIrd Edition, Pearson/PHI.

Reference Books:

1. Computer Organization and Architecture – William Stallings Sixth Edition, Pearson/PHI
2. Structured Computer Organization – Andrew S. Tanenbaum, 4th Edition, PHI/Pearson.
3. Fundamentals of Computer Organization and Design, -SivaraamaDandamudi, Springer Int. Edition.
4. Computer Architecture a quantitative approach, John L.Hennessy and David A. Patterson, Fourth Edition, Elsevier

COURSE OUTCOMES (COs)

On completion of the course, students are able to :

18CIC33.1	Interpret the functional architecture of computing systems.
18CIC33.2	Construct an instruction encoding scheme for an ISA.
18CIC33.3	Construct control unit for hardwired/micro programmed controller.
18CIC33.4	Solve computer arithmetic.
18CIC33.5	Distinguish memory systems and I/O methods.
18CIC33.6	Evaluate performance of various processors.

Semester End Examination (SEE) Question paper pattern:

1. Eight questions are to be set covering entire syllabus. **(student shall answer 5 full question)**
   Q1 and Q2 are compulsory from UNIT 1 and UNIT 2 respectively.
   Q3 and Q4 from UNIT 3, Q5 and Q6 from UNIT 4, Q7 and Q8 from UNIT 5.
2. There shall be a maximum of three sub divisions under each question. Numerical problems shall be set wherever possible
3. Each question will carry **14 marks.**

18ESCS02 - Digital and Logic Design

Total Credits : 4 | **Total Contact Hours : 60**

L-T-P :3-1-0 | **Contact Hours/week : 04**

IA Max Marks : 30 | **SEE Max Marks : 70**

Prerequisite : Basic Electronics (Bridge Course) | **Course Type : ES**

COURSE OBJECTIVES

1. To Understand Boolean algebra and basic properties of Boolean algebra
2. To Design simple combinational logics using basic gates
3. To Describe the operation and timing constraints for latches and registers.
4. To Draw a circuit diagram for a sequential logic circuit and analyze its timing properties

Module	COURSE CONTENTS	HOURS ALLOTTED
1	**Introduction:** Number System Representation, Binary addition, subtraction using 1's and 2's compliment, binary codes, BCD code, gray code, excess 3 code, Boolean algebra and logic gates: properties of Boolean algebra, principle of duality, De-Morgan's law(2,3 variable), Boolean function simplification, Logic Gates, Universal Gates, combinational & sequential Circuits, Realization of Boolean expression using universal gates.	**[08 Hours]**
2	**Simplification of Boolean Functions** Normal and canonical forms, Karnaugh map simplification with and without don't care (3,4 variable), Quine-Mccluskey method(with and without don't care), two-level implementation: AOI, OAI.	**[12 Hours]**
3	**Combinational Logic Design** Adder: Half adder, Full adder, Serial adder, Parallel adder & Carry look-ahead adder, Subtractor: Half subtractor & Full subtractor,. Multiplexers Demultiplexer, Encoders, Decoders, Decoders, BCD to 7 segment decoder, BCD to Excess-3 code convertor, Binary to gray and vice versa, magnitude comparator	**[14 Hours]**
4	**Sequential Logic Design** **Flip flops:** Basic bistable latch, Edge and level Triggering, Flip-flops: SR, D, T, JK, excitation tables. **Counters:** Asynchronous counters: up/down ripple counters, Synchronous counters: up/down 3,4bit counters, mod counters. **Registers**: shift registers, Applications of shift registers: Ring counter, Johnson counter.	**[14 Hours]**
5	Logic families Characteristics of digital IC"s, Standard TTL characteristics, Tristate buffer, Metal-oxide semi-conductor (MOS)	**[12 Hours]**

	family, CMOS logic (Inverter, NOR GATE, NAND gate) circuit operation. **Case Studies:** Delay generation, Signed multiplier design, Clock divider circuit, Clock signal generation with a specified duty Cycle.	

Text Books:

1. M Morris Mano, Digital Logic and Computer Design, 3rd Edition, 2006, PHI

2. R J Tocci : Digital Systems PHI , 2007

Reference Books:

1. Bignell&Donovan Digital Electronics, 4th Edition, 2007, Thomson Learning.

2. R. P Jain, Modern Digital Electronics, Second Edition, TMH

COURSE OUTCOMES (COs)

On completion of the course, students are able to :

18ESCS02.1	Discuss basic number theory and properties of boolean algebra. (L2)-unit-1
18ESCS02.2	Simplify Boolean expressions using Minimization methods. (L4)-unit-2
18ESCS02.3	Analyze the logic for Designing sequential and combinational circuits (L4) – unit 3,4
18ESCS02.4	Classify various sequential circuits using flip-flops, counters and registers. (L3) – unit4
18ESCS02.5	Explain the IC Digital Logic Families, MOS families (L2) – unit5
18ESCS02.6	Analyze operations of digital circuits (L4)-unit 5

Semester End Examination (SEE) Question paper pattern:

1. Eight questions are to be set covering entire syllabus. **(student shall answer 5 full question)**
   Q1 and Q2 are compulsory from UNIT 1 and UNIT 2 respectively.
   Q3 and Q4 from UNIT 3, Q5 and Q6 from UNIT 4, Q7 and Q8 from UNIT 5.
2. There shall be a maximum of three sub divisions under each question. Numerical problems shall be set wherever possible
3. Each question will carry **14 marks.**

18CS32L - Data Structures Laboratory

Total Credits : 1	**Total Contact Hours : 30**
L-T-P :0-0-2	**Contact Hours/week : 02**
CA Max Marks : 100	**SEE Max Marks : NA**
Prerequisite : Problem solving through programming	**Course Type : Core**

1. Write a program for following using Iterative methods
   (a) Linear Search
   (b) Binary search
   (c) Factorial
   (d) Fibonacci series
   (e) GCD
   (f) sum of series
2. Write a program for following using recursive methods
   (a) Linear Search
   (b) Binary search
   (c) Factorial
   (d) Fibonacci series
   (e) GCD
   (f) sum of series
3. Write a program to implement the various operations on stack using arrays.
4. Write a program to evaluate a given postfix expression using stacks.
5. Write a program to convert a given infix expression to postfix form using stacks.
6. Write a program to implement insertion, deletion and display operations on circular queue using arrays.
7. Write a program to implement insertion, deletion and display operations on double ended queue (de queue) using arrays.
8. Write programs to implement the operation the following using Single linked list
   (a) Creation
   (b) Insertion [beginning, end, position]
   (c) Deletion [beginning, end, position]
   (d) Search for key
   (e) Display [traverse]
9. Write programs to implement the operation the following using double linked list
   (a) Creation
   (b) Insertion [beginning, end, position]
   (c) Deletion [beginning, end, position]
   (d) Search for key

(e) Display [traverse]

10. Write a program to implement a stack using a linked list such that the *push* and *pop* operations of stack.
11. Write a program to implement a queue using a linked list such that the *enqueue*and *dequeue*operations of queue.
12. Write a program to create a binary search tree (BST) by considering the keys in given order and perform the following operations on it.
    (a) Creation and Insertion
    (b) Traverse in Preorder, Inorder, Postorder
    (c) Minimum key
    (d) Maximum key
    (e) Search for a given key
    (f) Find predecessor of a node
    (g) Find successor of a node
    (h) delete a node with given key

COURSE OUTCOMES (COs)

On completion of the course, students are able to :

18CS32L.1	Identify suitable data structures as required in C programs (L2)
18CS32L.2	Demonstrate the programs for implementing stacks, queues and their applications (L3)
18CS32L .3	Demonstrate and implement various operations of linked lists and their applications(L3)
18CS32L.4	Examine use of tree concepts to implement programs for their applications (4)
18CS32L.5	Design algorithms for solving problems like sorting, searching, insertion and deletion of data to a programs by choosing appropriate data structures (6)
18CS32L.6	Develop and use a suitable data structure and algorithm to solve a real world problems (6)

Assessment and Evaluation

CA (Continuous Assessment) : Every experiment is evaluated for100 marks on weekly basis

Test1 : Conducted for 100 marks in the middle of the semester

Test2: Conducted for 100 marks towards end of the semester

Semester End Test : conducted for 100 marks at the end of the semester

18ESCS02L -Digital and Logic Design Laboratory

Total Credits : 1	**Total Contact Hours : 30**
L-T-P :0-0-2	**Contact Hours/week : 02**
CA Max Marks : 100	**SEE Max Marks : NA**
Prerequisite : Basic Electronics	**Course Type : ES**

LIST OF EXPERIMENTS

Combinational circuits

1. Simplification, realization of the given Boolean expression using Logic gates and universal gates.
2. Realization of adder and subtractor using logic gates and using 74153 chip.
3. Realization of Binary to Gray code conversion and vice versa.
4. Realization of BCD to Excess-3 code conversion and vice versa using logic gates and 7483 chip.
5. Realization of One/Two bit comparator and study of 7485 magnitude comparator.
6. Verify the functionality of Multiplexer and De Multiplexer using 74153 and 74139 chip.
7. Realize Encoder using IC 74147 and IC 74148.
8. Verify Decoder to drive LED display using 7447 chip.

Sequential circuits

9. Verify truth table of Flip-Flops: SR Flip Flop, JK Master Slave Flip Flop, DFlip Flop and T Flip Flop using 7476 chip.
10. Realize shift operations like SIPO, SISO, PISO, PIPO using IC 7495.
11. Design asynchronous and synchronous MOD N up counter and down counter using 7476.
12. Design of Johnson and ring counter using 7495 chip.

Case Study:

- Design a digital circuit to determine a given year is a leap year(Calendar subsystem)
- Generate a single output pulse of a specified width using Mono stable Multi vibrator

Tool description:

Proteus is a simulation and design software tool developed by Labcenter for Digital system design. It is a software suite containing schematic, simulation as well as PCB designing.

ISIS is the software used to draw schematics and simulate the circuits in real time. The simulation allows human access during run time, thus providing real time simulation. Proteus is a Virtual System Modeling and circuit simulation application. The suite combines mixed mode SPICE circuit simulation, animated components and microprocessor models to facilitate co-simulation of complete microcontroller based designs. Proteus also has the ability to simulate the interaction between software running on a microcontroller and any analog or digital electronics connected to it.

Tool Version: Proteus 8.6

COURSE OUTCOMES (COs)

On completion of the course, students are able to :

18ESCS02L.1	Apply fundamentals of digital logic to simplify digital circuits (L3)
18ESCS02L.2	Implement simple combinational circuit in digital electronics (L3)
18ESCS02L.3	Implement combinational circuits using different IC's (L3)
18ESCS02L.4	Implement combinational circuits using different IC's(L3)
18ESCS02L.5	Implement simple sequential circuits using different IC's (L3)
18ESCS02L.6	Simulate waveforms of the circuits for analyze (L5)

Assessment and Evaluation

CA (Continuous Assessment) : Every experiment is evaluated for100 marks on weekly basis

Test1 : Conducted for 100 marks in the middle of the semester

Test2: Conducted for 100 marks towards end of the semester

Semester End Test : Conducted for 100 marks at the end of the semester

18MCC02 - Energy Studies

Credits : NON CREDIT | **Total Contact Hours : 45**

L-T-P :3-0-0 | **Contact Hours/week : 03**

IA Max Marks : 30 | **SEE Maximum Marks : 70**

Prerequisite : NA | **Course Type : Mandatory**

COURSE OBJECTIVES

1. To Provide adequate inputs on a variety of issues relating to Direct Energy conversion Systems.
2. To Create awareness among students about Non-Conventional sources of energy technologies and provide adequate inputs on a variety of issues.

Module	COURSE CONTENTS	HOURS ALLOTTED
1	**Introduction to Energy Sources** General introduction, energy consumption as a measure of prosperity, world energy futures, energy sources and their availability, renewable energy sources, prospects of renewable energy sources **Global Energy Scenario** Role of energy in economic development and social transformation, Overall energy demand, availability and consumption, Depletion of energy resources and its impact on economy, Non proliferation of nuclear energy.	**[09 Hours]**
2	**Indian Energy Scenario** Commercial and noncommercial forms of energy, Utilization pattern in the past, present and also future prediction, Sector wise energy consumption. Indian Electricity Rule (IE Rule) **Energy Policy** Energy policy issues at global level, national level and state level, Energy conservation act 2001, Electricity act 2003, Energy pricing and its impact on global variations. International energy policies of G-8, G-20, OPEC and European union countries.	**[10 Hours]**
3	**Energy Conservation** Introduction, principles of energy conservation, energy conservation planning, energy conservation in residential and commercial sector, energy conservation measures in some of the	**[08 Hours]**

	major enterprises, maintenance and energy conservation	
4	**Energy management & Audit** Objectives of energy management, need and scope of energy audit, methodology, types of energy audit, material and energy balance, energy auditing instruments, maintenance and audit	**[08 Hours]**
5	**Energy Storage** Need for energy storage, Energy storage systems- Mechanical energy storage i) Pumped hydro electric storage ii) compressed air iii) Flywheel- Electrical storage: Lead acid battery; super capacitor **Emerging Technologies** Magneto hydro dynamic power generation, fuel cells, geothermal energy, ocean thermal energy conversion, appropriate energy technology for rural development, economic aspects of conventional and renewable energy sources, future prospects of renewable energy in India	**[10 Hours]**

Text Books:

1. Jose Goldenberg, Thomas Johanson, and Reddy, A.K.N., Energy for Sustainable World, WileyEastern, 2005.
2. Charles E. Brown, World Energy Resources, Springer Publication, New York, 2002.
3. Culp, A.W., Principles of Energy Conversion, McGraw Hill New York, 2004.
4. Energy Conservation and Audit– Suresh kumarsoni and Manoj Nair, Satyaprakashan Tech India publications, second edition, 2012.

Reference Books:

1.Non Conventional Energy Sources– G D Rai, Khanna publications, fifth edition, 2011.

COURSE OUTCOMES (COs)

On completion of the course, students are able to :

18MCC02.1	Understand the need of energy conversion
18MCC02.2	Understand the different methods of energy storage
18MCC02.3	Understand the magnitudes of energy and resources
18MCC02.4	Understand the special engineering challenges of using each of these sources of energy efficiently and environmentally effectively
18MCC02.5	Understand the sources of energy and their contributions to the energy and power needs

Semester End Examination (SEE) Question paper pattern:

1. Eight questions are to be set covering entire syllabus. **(student shall answer 5 full question)**
   Q1 and Q2 are compulsory from UNIT 1 and UNIT 2 respectively.
   Q3 and Q4 from UNIT 3, Q5 and Q6 from UNIT 4, Q7 and Q8 from UNIT 5.
2. There shall be a maximum of three sub divisions under each question. Numerical problems shall be set wherever possible
3. Each question will carry **14 marks.**

Semester - IV

18BS4CS01 - Linear Algebra

Total Credits : 3 | **Total Contact Hours : 45**

L-T-P : 2-1-0 | **Contact Hours/week : 03**

IA Max Marks : 30 | **SEE Max Marks : 70**

Prerequisite : Engineering Mathematics | **Course Type : BS**

COURSE OBJECTIVES

1. To Learn to solve systems of linear equations.
2. To Understand the concepts of vector space and subspace.
3. To Gain knowledge to apply principles of matrix algebra to linear transformations

Module	COURSE CONTENTS	HOURS ALLOTTED
1	Matrices and Gaussian Elimination: Introduction, Geometry of linear equations, Gaussian Elimination, Triangular factors & Row exchanges, Inverses and transposes.	**[08 Hours]**
2	Vector Spaces -1: Vector spaces & subspaces (only definitions). Linear independence, basis and dimension, the four fundamental subspaces.	**[10 Hours]**
3	Linear transformations & Orthogonality - 1: Linear transformations, orthogonal vectors & subspaces cosines & projections onto lines, projections & least squares	**[10 Hours]**
4	Orthogonalization, Eigen Values and Eigen Vectors: Gram- Schmidt Orthogonalization, Introduction to Eigen values & Eigen vectors, Diagonalization of a matrix.	**[08 Hours]**
5	Linear Programming Problem-1: LPP- Formulation of the problem, General Linear Programming Problem**,** Canonical & Standard forms, Simplex method	**[09 Hours]**

Textbook

1. "Linear Algebra and its Applications", G. Strang, 4th Edition, Thomson Brooks/Cole, 2nd Indian reprint, 2007.
2. "Higher Engineering Mathematics", B S Grewal, 42nd Edition, Khanna Publishers, 2005 (Chapter nos. 2, 28, 33).

COURSE OUTCOMES (COs)

On completion of the course, students are able to :

18BS4CS01.1	Solve systems of linear equations using multiple methods, including Gaussian elimination and matrix inversion.
18BS4CS01.2	Interpret the concepts of vector space, linear independence and basis.
18BS4CS01.3	Use principles of matrix algebra to find linear transformations.
18BS4CS01.4	Examine the non-correlated variables by understanding the application of cosine projection.
18BS4CS01.5	Compute the eigenvectors and eigenvalues by diagonalization which is useful in matrix decomposition
18BS4CS01.6	Solve the Linear Programing problems using different modeling techniques.

Semester End Examination (SEE) Question paper pattern:

1. Eight questions are to be set covering entire syllabus. **(student shall answer 5 full question)**
   Q1 and Q2 are compulsory from UNIT 1 and UNIT 2 respectively.
   Q3 and Q4 from UNIT 3, Q5 and Q6 from UNIT 4, Q7 and Q8 from UNIT 5.
2. There shall be a maximum of three sub divisions under each question. Numerical problems shall be set wherever possible
3. Each question will carry **14 marks.**

18CS41 - Programming in JAVA

Total Credits : 3 | **Total Contact Hours : 45**

L-T-P : 3-0-0 | **Contact Hours/week : 03**

IA Max Marks : 30 | **SEE Max Marks : 70**

Prerequisite : Problem solving through programming | **Course Type : Core**

COURSE OBJECTIVES

1. To Understand the concepts of Object oriented programming
2. To Demonstrate different concepts of JAVA through programming
3. To Develop applications using Swings and demonstrate event delegation model
4. To Develop applications using JDBC connectivity

Module	COURSE CONTENTS	HOURS ALLOTTED
1	**JAVA Basics-1 :The History and Evolution of Java :** Java and its applications, Byte code, Java Development Kit(JDK), Java Buzzwords, Java Virtual Machine (JVM), The evolution of Java. **An overview of java :** Object Oriented Programming, Simple Java Programs, Two control Statements, Lexical Issues. **Data Types, Variables, and Arrays :**Java is a strongly typed Language, The primitive types (Integers, Floating Point, Characters, Booleans), A closer Look at literals (integers, Floating point, Boolean, Characters, String), Variables, Type Conversion and Casting, Automatic type Conversions, Arrays. **Operators :**Arithmetic Operators, The Bitwise Operators, Relational Operators, Boolean Logical Operators, The assignment operator, the? Operator, Operator Precedence.	**[09 Hours]**
2	**JAVA Basics-2 :Control Statements :** Java's Selection Statements (if, switch), Iteration Statements (while, do-while, for, for-each,, Nested Loops), Jump Statements (break, continue, return). **Introducing Classes :** Classes, Objects, Class Fundamentals, Declaring Objects, The **new** operator, dot(.) operator, Method declaration, Method calling, The **this** keyword, Constructors, Garbage Collection, final, finalize, static	**[09 Hours]**
3	**Inheritance :**Inheritance Basics, Using super**,** creating a multilevel hierarchy, when constructors are called**,** Method Overloading and Overriding, Dynamic Method Dispatch, Using abstract classes, Using final with Inheritance.	**[09 Hours]**

	String handling: string constructors, string class methods. **Packages and Interfaces :**Packages, Importing packages, Interfaces	
4	**Exception Handling:** Fundamentals, types, Uncaught exceptions, Using try and catch, Multiple catch statements, Nested try statements, throw, throws, finally, Exception subclasses **Introducing Swings:** The origins of Swing, Two Key Swing Features, Components and containers, The swing packages, Event Handling, Exploring Swing: JLabel, ImageIcon, JTextField, the Swing buttons, JTabbedPAne, JScrollPane, JList, JComboBox, Trees, JTable	**[10 Hours]**
5	**JDBC Objects:** The Concept of JDBC, JDBC Driver Types, JDBC Packages, A Brief Overview of the JDBC process; Database Connection; Associating the **JDBC/ODBC** Bridge with the Database; Statement Objects; Result Set; Transaction Processing; Metadata, Data types; Exceptions. **Case Study** Mini project using JDBC or ODBC	**[08 Hours]**

Textbook

1. Herbert Schmidt: Java - The Complete Reference, 7th Edition, Tata McGraw Hill, 2007.
2. Jim Keogh :J2EE - The Complete Reference –Tata McGraw Hill, 2007.

Reference Books

1. Khalid A Mughal : A Programmer's Guide to java Certification, Rolf W Rasmussen, 2ndEdition
2. Mike McGrath: Java Programming
3. Patrick Naughton: Java Handbook
4. Bruce Eckel'sMindView : Thinking in Java –4th Edition
5. Joshua Bloch: Effective Java- Foreword by Guy Steele, 2nd Edition

COURSE OUTCOMES (COs)

On completion of the course, students are able to :

18CS41.1	**Discuss** the concepts of Object-Oriented programming.(L2)
18CS41.2	**Explain** through examples by identifying classes, objects and members of a class.(L2)
18CS41.3	**Demonstrate** the concepts of inheritance to achieve reusability and to

	demonstrate exception handling mechanisms with real world examples.(L3)
18CS41.4	**Demonstrate** the working of applets to perform different events.(L3)
18CS41.5	**Demonstrate** the working of applications built using Java Swings.(L3)
18CS41.6	**Demonstrate** JDBC connectivity by building java applications.(L3)

Semester End Examination (SEE) Question paper pattern:

1. Eight questions are to be set covering entire syllabus. **(student shall answer 5 full question)**
   Q1 and Q2 are compulsory from UNIT 1 and UNIT 2 respectively.
   Q3 and Q4 from UNIT 3, Q5 and Q6 from UNIT 4, Q7 and Q8 from UNIT 5.
2. There shall be a maximum of three sub divisions under each question. Numerical problems shall be set wherever possible
3. Each question will carry **14 marks.**

18CIC42 - Automata Theory and Logic

Total Credits : 4 | **Total Contact Hours : 60**

L-T-P : 3-1-0 | **Contact Hours/week : 04**

IA Max Marks : 30 | **SEE Max Marks : 70**

Prerequisite : NA | **Course Type : Core**

COURSE OBJECTIVES

1. To Introduce concepts in automata theory and theory of computation
2. To Identify different formal language classes and their relationships
3. To Design grammars and recognizers for different formal languages
4. To Prove or disprove theorems in automata theory using its properties

Module	COURSE CONTENTS	HOURS ALLOTTED
1	**Introduction to Finite Automata:** Introduction to finite automata, The central concepts of automata theory, Deterministic finite automata – definition, how a DFA processes strings, notations for DFA's Non-deterministic finite automata – definition, extended transition function, the language of an NFA	**[10 Hours]**
2	**Introduction to Finite Automata:** Introduction to finite automata, The central concepts of automata theory, Deterministic finite automata – definition, how a DFA processes strings, notations for DFA's Non-deterministic finite automata – definition, extended transition function, the language of an NFA	**[14 Hours]**
3	**Properties of regular languages**- proving languages not to be regular, the pumping lemma for regular languages **,** Closure properties of regular languages – closure of regular languages under Boolean operations-union, complementation, intersection & difference**,** Equivalence and minimization of automata **Context free grammars and languages:** Definition of context-free grammars, derivations using a grammar, leftmost and rightmost derivations, the language of a grammar and sentential forms, exercise problems, Parse trees – constructing a parse tree, the yield of a parse tree, inference, derivations and parse trees, Applications of context free grammars – Markup languages, XML and document-type definitions, Ambiguity in grammars and languages – ambiguous grammars.	**[12 Hours]**
4	**Pushdown automata:** The languages of a PDA – acceptance by final	**[14**

	state, acceptance by empty stackInformal introduction, formal definition of PDA, a graphical notation for PDA's, The languages of a PDA – from empty stack to final state, from final state to empty stack Equivalence of PDA's and CFG's – from grammars to PDA, from PDA's to grammars. **Properties of context free languages:**Normal forms for context free grammars – eliminating useless symbols, computing the generating and reachable symbols, Eliminating $\in$-productions, eliminating unit productions, Chomsky normal form (CNF), exercise problems, The pumping lemma for context free languages, Closure properties of context free languages.	**Hours]**
5	**Introduction to Turing machines:** Problems that computers cannot solve, The Turing machine – the quest to decide all mathematical questions, notation for the Turing machine, instantaneous descriptions for Turing machines. Programming techniques for Turing machines – storage in the state, multiple subroutines, exercises tracks, An undecidable problem that is RE, Post's correspondence problem	**[10 Hours]**

Textbook

1. **Introduction to Automata theory**, **Languages and Computation,** John E. Hopcroft, Rajeev Motwani Jeffery D. Ullman, Third Edition Pearson education. 2007

Reference Book

2. An Introduction to Formal languages and Automata, Peter Linz, III Edition

COURSE OUTCOMES (COs)

On completion of the course, students are able to :

18CIC42.1	**Discuss** computational devices according to their computational power, and tools which will allow us to tell if a device is powerful enough to solve a given computational problem (L2)
18CIC42.2	Relate the concept of the grammar with the concept of programming language
18CIC42.3	Solve the problems related to Finite Automata, RE, CFG, PDA and Turing Machine(L3)
18CIC42.4	Present the theoretical preparation of programming languages and compilers (L3)

18CIC42.5	Analyze various problems and categorize them into P, NP, NP-Complete and NP Hard problems (L4)
18CIC42.6	Apply the concepts of automata in system level (L3)

Semester End Examination (SEE) Question paper pattern:

1. Eight questions are to be set covering entire syllabus. **(student shall answer 5 full question)**
   Q1 and Q2 are compulsory from UNIT 1 and UNIT 2 respectively.
   Q3 and Q4 from UNIT 3, Q5 and Q6 from UNIT 4, Q7 and Q8 from UNIT 5.
2. There shall be a maximum of three sub divisions under each question. Numerical problems shall be set wherever possible
3. Each question will carry **14 marks.**

18CS43 - Microcontroller and Embedded systems

Total Credits : 4 | **Total Contact Hours : 60**

L-T-P : 3-1-0 | **Contact Hours/week : 04**

IA Max Marks : 30 | **SEE Max Marks : 70**

Prerequisite : Digital and Logic Design, Computer Organization and Architecture | **Course Type : Core**

COURSE OBJECTIVES

1. To Understand the microcontroller architecture.
2. To Learn to write programs using assembly language
3. To Learn to develop simple applications on microprocessor and microcontroller - based systems
4. To Design simple embedded computing platform

Module	COURSE CONTENTS	HOURS ALLOTTED
1	**The 8051 Microcontrollers** Microntrollers and Embedded processors, overview of the 8051 family, assembling and running an 8051 program, data types and directives, 8051 flag bits and the PSW register, 8051 register banks and stack, 8051, 8051 I/O port programming	**[10 Hours]**
2	**8051 TIMER programming in C** 8051 Addressing modes, 8051 programming in C, Programming 8051 Timers, Counter programming, programming timers 0 and 1 in 8051 C. **8051 Serial Port programming in C** Basics of serial communication, 8051 connection to RS232, 8051 serial port programming in C	**[14 Hours]**
3	**Interrupts programming in C** 8051 Interrupts, programming Timer Interrupts, programming external hardware interrupts, programming the serial communication interrupt, programming the serial communication interrupt, interrupt priority in the 8051, interrupt programming in C.LCD, Keyboard, parallel and serial ADC, DAC, electromechanical relays, stepper motor, DC motor.	**[12 Hours]**
4	**Introduction to Embedded Systems** Embedded system, Application areas, categories of embedded systems, overview of embedded system architecture specialties of	**[10 Hours]**

	embedded systems, and recent trends in embedded system.	
5	**Architecture of Embedded Systems** Hardware architecture, software architecture, application software, communication software, process of generating executable image, development/testing tools. **Case Study : Embedded systems applications** RFID systems, RFID applications, RFID tag, RFID reader, application development using RFID, programming for RFID Embedded systems.	**[14 Hours]**

Textbook

1. Muhammad Ali Mazidi, "The 8051 Microcontroller and Embedded Systems using assembly and C" Pearson education second edition 2008.
2. Dr. K V K K Prasad, "Embedded/Real-Time Systems: concepts, design and programming". Black Book Paraglyph press Inc., Edition: 2011.

COURSE OUTCOMES (COs)

On completion of the course, students are able to :

18CS43.1	**Describe** the architectural features of 8051 microcontroller.(L2)
18CS43.2	**Summarize** and ability to use embedded C program using 8051 microcontroller (L2)
18CS43.3	**Apply** and configure the special function registers to communicate with peripheral devices (L3)
18CS43.4	**Analyze** interface memory, I/O devises and interrupt in typical microcontroller.(L4)
18CS43.5	**Analyze** the use of Embedded systems to perform a specific task. (L4)
18CS43.6	**Construct** a simple real time application using 8051 microcontroller to solve the societal problem (L3)

Semester End Examination (SEE) Question paper pattern:

1. Eight questions are to be set covering entire syllabus. **(student shall answer 5 full question)**
   Q1 and Q2 are compulsory from UNIT 1 and UNIT 2 respectively.
   Q3 and Q4 from UNIT 3, Q5 and Q6 from UNIT 4, Q7 and Q8 from UNIT 5.
2. There shall be a maximum of three sub divisions under each question. Numerical problems shall be set wherever possible
3. Each question will carry **14 marks.**

18CIC45 – Operating Systems

Total Credits : 4 | **Total Contact Hours : 60**

L-T-P : 4-0-0 | **Contact Hours/week : 04**

IA Max Marks : 30 | **SEE Max Marks : 70**

Prerequisite : Problem solving through programming, Computer Organization and Architecture | **Course Type : Core**

COURSE OBJECTIVES

1. To understand the services provided by an operating system.
2. To understand how processes are synchronized and scheduled.
3. To understand approaches of deadlock and memory management.
4. To understand structure and organization of file system.

Module	COURSE CONTENTS	HOURS ALLOTTED
1	**Introduction to Operating System:** What is an Operating System, Mainframe systems, Multiprocessor Systems, OS Components, OS Services, System calls, System programs, OS Structures, Virtual Machines. **Processes**: Process concept, Process scheduling,Co-operating processes, Operations on processes, Inter process communication. **Threads**: Introduction to Threads, Single and Multi-threaded processes and its benefits, User and Kernel threads, Multithreading models.	**[14 Hours]**
2	**CPU Scheduling:** Basic concepts, scheduling criteria, Scheduling Algorithms, Multiple Processor Scheduling. **Process Synchronization:** Mutual Exclusion, Critical – section problem, Synchronization hardware, Semaphores, Classic problems of synchronization, Critical Regions, Monitors, Synchronization Examples.	**[12 Hours]**
3	**Deadlocks:** Deadlocks: System Model, Deadlock characterization, Methods for handling Deadlocks, Deadlock prevention, Deadlock Avoidance, Deadlock Detection, Recovery from Deadlock. **Memory Management:** Memory Management: Logical and physical Address Space, Swapping, Contiguous Memory Allocation, Paging, Segmentation, Segmentation with paging	**[12 Hours]**

4	**Virtual Memory** Virtual Management: Demand paging, Process creation, Page Replacement Algorithms, Allocation of Frames, Thrashing, **Storage Management:** **File-System Interface:** File concept, Access Methods, Directory structure, Protection and consistency semantics. **File-System Implementation:** File-System structure, File-System Implementations, Directory Implementation, Allocation Methods, Free-space Management.	**[10 Hours]**
5	**Disk Management** Disk Scheduling, Disk Management, Swap-Space Management, stable-storage Implementation. **Case Study:** The Linux System: Linux history; Design principles; Kernel modules; Process management; File systems, Input and output; Inter-process communication.	**[08 Hours]**

Textbook

1. Operating System by Silberschatz / Galvin / Gagne, 6th Edition,WSE (WILEY Publication)

Reference Books:

1. Operating System Concepts and design by Milan Milonkovic, II Edition, McGraw Hill 1992.
2. Operation System Concepts by Tanenbaum, 2nd Edition, Pearson Education.
3. Operating System by William Stallings, 4th Edition, Pearson Education.

COURSE OUTCOMES (COs)

On completion of the course, students are able to :

18CIC45.1	Discuss different types of modern operating systems, their structures and basic functions.
18CIC45.2	Explain the basic concepts of process scheduling, critical section problem, deadlocks and memory management strategies.
18CIC45.3	Apply different CPU Scheduling algorithms and process synchronization techniques.
18CIC45.4	Apply different memory management strategies and deadlock handling mechanisms.
18CIC45.5	Demonstrate different disk scheduling algorithms and file management strategies.
18CIC45.6	Illustrate high-level structure of the Linux kernel.

Semester End Examination (SEE) Question paper pattern:

1. Eight questions are to be set covering entire syllabus. **(student shall answer 5 full question)**
   Q1 and Q2 are compulsory from UNIT 1 and UNIT 2 respectively.
   Q3 and Q4 from UNIT 3, Q5 and Q6 from UNIT 4, Q7 and Q8 from UNIT 5.
2. There shall be a maximum of three sub divisions under each question. Numerical problems shall be set wherever possible
3. Each question will carry **14 marks.**

18HSS04 – Business Communication and Presentation Skills

Total Credits : 3 | **Total Contact Hours : 45**

L-T-P : 3-0-0 | **Contact Hours/week : 03**

IA Max Marks : 30 | **SEE Max Marks : 70**

Prerequisite : NA | **Course Type : HSS**

COURSE OBJECTIVES

1. To Learn public speaking
2. To Learn to demonstrate critical and innovative thinking.
3. To Understand the importance of research in developing a specific topic of your own.

Module	COURSE CONTENTS	HOURS ALLOTTED
1	**Business communication**: Role of communication in information age; concept and meaning of communication; skills necessary for technical communication; Communications in a technical organization; Barriers to the process of communication and sola. **Style and organization in technical communication**: Listening, speaking, reading and writing as skills; Objectivity, clarity, precision as defining features of technical communication; Various types of business writing: Letters, reports, notes, memos; Language and format of various types of business letters; Language and style of reports; Report writing strategies; Analysis of a sample report.	**[09 Hours]**
2	**Communication and personality development**: Psychological aspects of communication, cognition as a part of communication; Emotional Intelligence; Politeness and Etiquette in communication; Cultural factors that influence communication; Mannerisms to be avoided in communication; Language and persuasion; Language and conflict resolution. **Language Laboratory**emphasizing: Listening and comprehension skills; Reading Skills; Sound Structure of English and intonation patterns.	**[09 Hours]**
3	**Oral Presentation and professional speaking**: Basics of English pronunciation; Elements of 8effective presentation; Body Language and use of voice during presentation; Connecting with the audience during presentation; Projecting a positive image while speaking; Planning and preparing a model presentation; Organizing the presentation to suit the audience and context; Basics of public	**[09 Hours]**

	speaking; Preparing for a speech.	
4	**Career Oriental Communication**: Resume and biodata: Design & style; Applying for a job: Language and format of job application. Job Interviews: purpose and process; How to prepare for interviews; Language and style to be used in interview; Types of interview questions and how to answer them; Group Discussion: structure and dynamics; Techniques of effective participation in group discussion; Preparing for group discussion.	**[09 Hours]**
5	**Advanced Techniques in Technical Communication**: Interview through telephone/video-conferencing; Power-point presentation: structure and format; Using e-mail for business communication; Standard e-mail practices; Language in e-mail; Using internet for collecting information; Referencing while using internet materials for project reports; Writing for the media. **Language laboratory** training in speaking skills covering oral presentations, mock interviews and model group discussions through the choice of appropriate programmes.	**[09 Hours]**

Textbook / Reference Books

1. Fred Luthans, Organizational Behaviour, McGraw Hill
2. Lesikar and petit, Report writing for Business
3. M. Ashraf Rizvi, Effective Technical Communication, McGraw Hill
4. Wallace and masters, Personal Development for Life and Work, Thomson Learning
5. Hartman Lemay, Presentation Success, Thomson Learning
6. Malcolm Goodale, Professional Presentations
7. Farhathullah, T. M. Communication skills for Technical Students

COURSE OUTCOMES (COs)

On completion of the course, students are able to :

18HSS04.1	Overcome common obstacles in public speaking.
18HSS04.2	Demonstrate critical and innovative thinking.
18HSS04.3	Display complete in oral, written and visualization.
18HSS04.4	Understand the importance of research in developing your topic.

18HSS04.5	Use resources to gather information effectively.
18HSS04.6	Overcome common obstacles in public speaking.

Semester End Examination (SEE) Question paper pattern:

1. Eight questions are to be set covering entire syllabus. **(student shall answer 5 full question)**
   Q1 and Q2 are compulsory from UNIT 1 and UNIT 2 respectively.
   Q3 and Q4 from UNIT 3, Q5 and Q6 from UNIT 4, Q7 and Q8 from UNIT 5.
2. There shall be a maximum of three sub divisions under each question. Numerical problems shall be set wherever possible
3. Each question will carry **14 marks.**

18CS41L – Programming in JAVA Laboratory

Total Credits : 1 | **Total Contact Hours : 30**

L-T-P : 2-0-0 | **Contact Hours/week : 02**

CA Max Marks : 100 | **SEE Max Marks : NA**

Prerequisite : Problem solving through programming | **Course Type : Core**

1. Programs to use Selection and Iteration statements to find greatest number, to print Fibonacci series, to check a number is a palindrome, neon or duck.
2. Programs to sort an array, to search an element of the array and print the deviation in marks of each student against the average of marks of the class.
3. Programs to create constructors and methods with a case study.
4. Programs to implement different types of Inheritance.
5. Programs to demonstrate Exception handling mechanisms.
6. Programs to explore the uses of this, super , static, final key words.
7. Programs to demonstrate the advantages of Multithreading.
8. To develop Applets/Frames to perform simple tasks like drawing a Smiley, Bouncing a Ball etc.,
9. To demonstrate Event Handling Mechanism in JAVA.
10. To develop applications using JDBC connectivity to interact with MySQL/Oracle database.

COURSE OUTCOMES (COs)

On completion of the course, students are able to :

18CS41L.1	Illustrate simple java programs to explore different looping constructs and to work with arrays (L3)
18CS41L.2	Demonstrate the different types of constructors and Inheritance (L3)
18CS43L.3	Examine why java is a robust language using Exception handling mechanism (L4)
18CS41L.4	Demonstrate the advantages of multithreading concepts through programming (L3)

18CS41L.5	Demonstrate the delegation model of event handling mechanism using Applets and Frames (L3)
18CS41L.6	Develop applications using JDBC connectivity to interact with MySQL/Oracle database (L6)

Assessment and Evaluation

CA (Continuous Assessment) : Every experiment is evaluated for100 marks on weekly basis

Test1 : Conducted for 100 marks in the middle of the semester

Test2: Conducted for 100 marks towards end of the semester

Semester End Test : Conducted for 100 marks at the end of the semester

18CS43L – Microcontroller Laboratory

Total Credits : 1 | **Total Contact Hours : 30**

L-T-P : 2-0-0 | **Contact Hours/week : 02**

CA Max Marks : 100 | **SEE Max Marks : NA**

Prerequisite : Digital and Logic Design | **Course Type : Core**

1. Write an 8051 C program to display hexadecimal up/down counter.
2. Write an 8051 C program to blink an alternate LED's of any port with 500msec delay (produced using timer).
3. Write an 8051 C program to transmit characters (CSEDEPT) to a PC using the serial port and display on the serial window.
4. Write an 8051 C program to configure an LCD and display string.
5. Write an 8051 C program to interface 4x4 switch matrix keyboard.
6. Write an 8051 C program to interface a temperature sensor using ADC.
7. Write an 8051 C program to generate different waveforms through DAC interface.
8. Write an 8051 C program to interface stepper motor.
9. Write an 8051 C program to interface DC motor.
10. Design an Elevator system and Traffic control System simulate using 8051 microcontroller (case study).

COURSE OUTCOMES (COs)

On completion of the course, students are able to :

18CS43L.1	Demonstrate embedded C programming using 8051. (L3)
18CS43L.2	Illustrate assembly level programming using low powered MSP430.(L3)
18CS43L.3	Demonstrate Keil µVision-3/4 through programming (L3)
18CS43L.4	Demonstrate Proteus tool through programming (L3)
18CS43L.5	Construct circuits for various applications using microcontrollers.(L5)
18CS43L.6	Develop the concepts on real- time applications. (L6)

Assessment and Evaluation
Test1 : Conducted for 100 marks in the middle of the semester
Test2: Conducted for 100 marks towards end of the semester
Semester End Test : Conducted for 100 marks at the end of the semester

Semester- V

18BS5CS01 - PROBABILITY, STATISTICS AND RANDOM PROCESSES

Total Credits : 3 **Total Contact Hours : 45**

L-T-P : 3-0-0 **Contact Hours/week : 03**

IA Max Marks : 30 **SEE Max Marks : 70**

Prerequisite : Discrete Mathematics and Graph Theory, Engineering Mathematics **Course Type : BS**

COURSE OBJECTIVES

1. To Learn and apply probability theory for application problems
2. To Analyze and compare Discrete and Continuous probability distributions
3. To Discuss the correlation and regression analysis based on given samples
4. To Prepare null and alternative hypothesis to test its validity based on random samples
5. To Analyze various queuing models

Module	COURSE CONTENTS	HOURS ALLOTTED
1	**Probability and Random Variables and their Properties** Definitions of Probability, Addition Theorem, Conditional Probability, Multiplication Theorem, Bayes' Theorem of Probability and Geometric Probability Discrete Random Variable, Continuous Random Variable, Probability Distribution, Joint Probability Distributions Their Properties, Transformation Variables, Mathematical Expectations, Probability Generating Functions.	**[12 Hours]**
2	**Probability Distributions** Discrete Distributions: Binomial, Poisson Negative Binominal Distributions and their Properties; Continuous Distributions : Uniform, Normal, Exponential Distributions and their Properties.	**[08 Hours]**
3	**Multivariate Analysis, Curve Fitting, Estimation and testing of hypothesis** Correlation, Correlation Coefficient, Rank Correlation, Regression Analysis, Multiple Regression, Principles of Least Squares and Curve Fitting Sample, Populations, Statistic, Parameter, Sampling Distribution, Standard Error, Un-Biasedness, Efficiency, Maximum Likelihood Estimator, Notion & Interval Estimation.	**[09 Hours]**

4	**Sample Tests-** Large Sample Tests Based on Normal Distribution , Small Sample Tests : Testing Equality of Means, Testing Equality of Variances, Test of Correlation Coefficient, Test for Regression Coefficient; Coefficient of Association, 2 – Test for Goodness of Fit, Test for Independence	**[09 Hours]**
5	**Queuing Theory** Queue Description, Characteristics of a Queuing Model, Study State Solutions of M/M/1: Model, M/M/1 ; N Model, M/M/C: Model, Case Studies	**[07 Hours]**

Textbook

3. Probability & Statistics for Engineers and Scientists, Walpole, Myers, Myers, Ye. Pearson Education.
4. Probability, Statistics and Random Processes , T.Veerarajan, Tata McGraw – Hill

Reference Books

1. Probability & Statistics with Reliability, Queuing and Computer Applications, Kishor S. Trivedi, 1999, Prentice Hall of India

COURSE OUTCOMES (COs)

On completion of the course, students are able to :

18BS5CS01.1	Apply probability theory for application problems
18BS5CS01.2	Analyze and compare Discrete and Continuous probability distributions
18BS5CS01.3	Discuss the correlation and regression analysis based on given samples
18BS5CS01.4	Prepare null and alternative hypothesis to test its validity based on random samples
18BS5CS01.5	Analyze various queuing models

Semester End Examination (SEE) Question paper pattern:

1. Eight questions are to be set covering entire syllabus. **(student shall answer 5 full question)**
   Q1 and Q2 are compulsory from UNIT 1 and UNIT 2 respectively.
   Q3 and Q4 from UNIT 3, Q5 and Q6 from UNIT 4, Q7 and Q8 from UNIT 5.
2. There shall be a maximum of three sub divisions under each question. Numerical problems shall be set wherever possible
3. Each question will carry **14 marks.**

18CIC52- Data Communication and Computer Networks

Total Credits : 3 | **Total Contact Hours : 45**

L-T-P : 3-0-0 | **Contact Hours/week : 03**

IA Max Marks : 30 | **SEE Max Marks : 70**

Prerequisite : Digital Logic and Design, Operating System | **Course Type : Core**

COURSE OBJECTIVES

1. To Provide knowledge about various types of networking communication models and data transmissions.
2. To Explore Signal-encoding techniques, Digital data communication techniques and Data link Control.
3. To Learn Concepts of Multiplexing, Circuit Switching and packet switching and Routing in Switched Networks.
4. To Outline the Congestion control in switched Data network, Local Area Network Overview, Internet work protocols and Transport protocols.

Module	COURSE CONTENTS	HOURS ALLOTTED
1	**Data communication and networking overview:** A communication model-data communication-data communication networking. Protocol architecture: The need for a protocol architecture-a simple protocol architecture - OSI – TCP/IP protocol architecture. **Data transmission**: Concepts and terminology-Analog and Digital data transmission Impairments – channel capacity.	**[09 Hours]**
2	**Signal encoding techniques:** Digital data, Digital signals & analog signals – analog data digital signals and analog signals. **Digital data communication techniques:** Asynchronous and synchronous transmission -Types of Error -Error Detection -Error Correction-Line configurations- Interfacing. **Data link Control:** Flow control-Error Control-HDLC.	**[10 Hours]**
3	**Multiplexing:** FDM – Synchronous TDM – statistical TDM – Asymmetric DSL – xDSL **Circuit Switching and packet switching**: switching networks - circuit switching networks - circuit switching concepts - control signaling - soft switch architecture-Packet switching principles-X.25-Frame Relay. **Routing in Switched Networks:** Routing in circuit switched network – Routing in packet switched network – least cost algorithms.	**[10 Hours]**

4	**Congestion control in switched Data network:** Effect of congestion - Congestion control - Traffic management - Congestion control in packet switching networks - Frame Relay congestion control. **Local Area Network Overview:** Background – Topologies and transmission media – LAN protocol architecture – bridges – layer2 and layer3 switches.	**[10 Hours]**
5	**Internet work protocols:** Basic protocol functions – principles of internetworking – connectionless internetworking – Internet Protocol. **Transport protocols:** Connection – oriented TCP – TCP – Congestion control – UDP	**[06 Hours]**

Textbook

1. Data and Computer Communication, William Stallings, tenth Edition, , 2013. ISBN: 81-203-2355-6, Prentice Hall of India

Reference Books

1. Data Communications and Networking, Fourth Edition, Behrouz A. Forouzan, Tata McGraw-Hill, 2017. ISBN: 0-07-058408-7.

COURSE OUTCOMES (COs)

On completion of the course, students are able to :

18CS52.1	Understand of the fundamental concepts of Data communication along with layer models such as OSI and TCP/IP models.
18CS52.2	Analyze the analog to Digital conversions and vice versa, Multiplexing and various types of transmission media used in data communication and methods to optimize utilization of their capacities (L4)
18CS52.3	Analyze different types of switching networks and compare different transmission mediums (L4)
18CS52.4	Test various error detection and correction techniques employed in data link layer (L3)
18CS52.5	Analyze and compare congestion control protocols (L4)
18CS52.6	Design and simulate various topologies using layer 2 and layer 3 devices.

Semester End Examination (SEE) Question paper pattern:

1. Eight questions are to be set covering entire syllabus. **(student shall answer 5 full question)**
   Q1 and Q2 are compulsory from UNIT 1 and UNIT 2 respectively.
   Q3 and Q4 from UNIT 3, Q5 and Q6 from UNIT 4, Q7 and Q8 from UNIT 5.
2. There shall be a maximum of three sub divisions under each question. Numerical problems shall be set wherever possible
3. Each question will carry **14 marks.**

18CIC53- Database Systems

Total Credits : 4 | **Total Contact Hours : 60**

L-T-P : 4-0-0 | **Contact Hours/week : 04**

IA Max Marks : 30 | **SEE Max Marks : 70**

Prerequisite : Data Structures and Algorithms | **Course Type : Core**

COURSE OBJECTIVES

1. To have a broad understanding of database concepts and database management system software
2. To be able to model an application's data requirements using conceptual modeling tools like ER diagrams and design database schemas based on the conceptual model.
3. To have a high-level understanding of major DBMS components and their function
4. To be able to write SQL commands to create tables and indexes, insert/update/delete data, and query data in a relational DBMS.
5. To be able to program a data-intensive application using DBMS APIs.

Module	COURSE CONTENTS	HOURS ALLOTTED
1	**Introduction to Databases** Introduction, Characteristics of database approach, Advantages of using the DBMS approach, History of database applications. **Overview of Database Languages and Architectures:** Data Models, Schemas, and Instances. Three schema architecture and data independence, database languages, and interfaces, The Database System environment. Conceptual Data **Modeling using Entities and Relationships:** Entity types, Entity sets, attributes, roles, and structural constraints, Weak entity types, ER diagrams, examples, Specialization and Generalization.	**[13 Hours]**
2	**Relational Model** **Relational Model:** Relational Model Concepts, Relational Model Constraints and relational database schemas, Update operations, transactions, and dealing with constraint violations. **Relational Algebra:** Unary and Binary relational operations, additional relational operations (aggregate, grouping, etc.)	**[13 Hours]**

	Examples of Queries in relational algebra. **Mapping Conceptual Design into a Logical Design:** Relational Database Design using ER-to-Relational mapping. **SQL:**SQL data definition and data types, specifying constraints in SQL, retrieval queries in SQL, INSERT, DELETE, and UPDATE statements in SQL, Additional features of SQL.	
3	**SQL :** Advances Queries: More complex SQL retrieval queries, Specifying constraints as assertions and action triggers, Views in SQL, Schema change statements in SQL. **Database Application Development:** Accessing databases from applications, An introduction to JDBC, JDBC classes and interfaces,SQLJ, Stored procedures, Case study: The internet Bookshop. **Internet Applications:** The three-Tier application architecture, The presentation layer, The Middle Tier	**[12 Hours]**
4	**Normalization: Database Design Theory** :Informal design guidelines for relation schema, Functional Dependencies, Normal Forms based on Primary Keys, Second and Third Normal Forms, Boyce-Codd Normal Form, Multivalued Dependency and Fourth Normal Form, Join Dependencies and Fifth Normal Form. **Normalization Algorithms:** Inference Rules, Equivalence, and Minimal Cover, Properties of Relational Decompositions, Algorithms for Relational Database Schema Design, Nulls, Dangling tuples, and alternate Relational Designs, Further discussion of Multivalued dependencies and 4NF, Other dependencies and Normal Forms	**[11 Hours]**
5	**Transaction Processing:** Introduction to Transaction Processing, Transaction and System concepts, Desirable properties of Transactions, Characterizing schedules based on recoverability, Characterizing schedules based on Serializability, Transaction support in SQL. **Concurrency Control in Databases:** Two-phase locking techniques for Concurrency control, Concurrency control based on Timestamp ordering, Multiversion Concurrency control techniques, Validation Concurrency control techniques, Granularity of Data items and Multiple Granularity Locking. **Introduction to Database Recovery Protocols:** Recovery Concepts, NO-UNDO/REDO recovery based on Deferred update, Recovery techniques based on immediate update, Shadow paging, Database backup and recovery from catastrophic failures	**[11 Hours]**

Textbook

1. Fundamentals of Database Systems, RamezElmasri and Shamkant B. Navathe, 7th Edition, 2017, Pearson
2. Database management systems, Ramakrishnan, and Gehrke, 3rd Edition, 2014, McGraw Hill

Reference Books

1. Database System Concepts, SilberschatzKorth and Sudharshan, 6th Edition, 2013, Mc-GrawHill
2. Database Principles Fundamentals of Design, Implementation and Management, Coronel, Morris, and Rob, Cengage Learning 2012

COURSE OUTCOMES (COs)

On completion of the course, students are able to :

18CIC53.1	Construct Entity-Relationship (ER) model and also to learn different issues in the design and implementation of a Database system(L3)
18CIC53.2	Demonstrate by providing solutions through Relational Algebraic expressions and structured query language commands.
18CIC53.3	Construct SQL queries for retrieving multiple tuples using Iterators CURSORs and Triggers (L3)
18CIC53.4	Analyze the different normalization techniques by understanding the essential DBMS concepts (L4)
18CIC53.5	Demonstrate the ACID properties of Transaction (L3)
18CIC53.6	Apply Demonstrate the ACID properties of Transaction techniques for achieving Concurrency control and for database recovery (L3)

Semester End Examination (SEE) Question paper pattern:

1. Eight questions are to be set covering entire syllabus. **(student shall answer 5 full question)**
   Q1 and Q2 are compulsory from UNIT 1 and UNIT 2 respectively.
   Q3 and Q4 from UNIT 3, Q5 and Q6 from UNIT 4, Q7 and Q8 from UNIT 5.
2. There shall be a maximum of three sub divisions under each question. Numerical problems shall be set wherever possible
3. Each question will carry **14 marks.**

18CS54- Software Engineering and Testing

Total Credits : 3 | **Total Contact Hours : 45**

L-T-P : 3-0-0 | **Contact Hours/week : 03**

IA Max Marks : 30 | **SEE Max Marks : 70**

Prerequisite : Programming in JAVA | **Course Type : Core**

COURSE OBJECTIVES

1. To explain the importance of OOSE in Software development.
2. To explain the students the importance of Requirements Engineering.
3. To explain the role of UML and Testing in Software Development.
4. To explain the entire Software Development Process with aid of case studies

Module	COURSE CONTENTS	HOURS ALLOTTED
1	**Introduction to Object Oriented Software Engineering and Requirements Engineering:** Nature of the Software, Types of Software , Software Engineering Projects, Software Engineering Activities, Software Quality, Introduction to Object Orientation, Software Process Models- Waterfall Model, Opportunistic Model , Phased Released Model, Spiral Model, Evolutionary Model, Concurrent Engineering Model. Domain Analysis, Problem Definition and Scope, Requirements Definition, Types of Requirements, Techniques for Gathering and Analyzing Requirements, Requirement Documents, Reviewing, Managing Change in Requirements.	**[12 Hours]**
2	**Unified Modeling Language & Use Case Modeling** Introduction to UML, Modeling Concepts, Types of UML Diagrams with Examples; User-Centered Design, Characteristics of Users, Developing Use - Case Models of Systems, Use-Case Diagram, Use- Case Descriptions, Basics of User Interface Design, Usability Principles, User Interfaces.	**[09 Hours]**
3	**Class Design and Class Diagrams** Essentials of UML Class Diagrams, Associations and Multiplicity, Other Relationships, Generalization, Instance Diagrams, Advanced Features of Class Diagrams, Interaction and Behavioral Diagrams: Interaction Diagrams, State Diagrams, Activity Diagrams, Component	**[08 Hours]**

	and Deployment Diagrams.	
4	**Software Design and Architecture:** Process of Design, Principles Leading to Good Design, Techniques for Making Good Design Decisions, Good Design Document; Pattern Introduction, Design Patterns: Abstraction-Occurrence Pattern, General Hierarchical Pattern, Play-Role Pattern, Singleton Pattern, Observer Pattern, Delegation Pattern, Adaptor Pattern, Façade Pattern, Immutable Pattern, Read-Only Interface Pattern and The Proxy Pattern; Software Architecture Contents of Architecture Model, Architectural Patterns: Multilayer, Client-Server, Broker, Transaction Processing, Pipe & Filter and MVC Architectural Patterns	**[08 Hours]**
5	**Software Testing** Overview of Testing, Testing Concepts, Testing Activities, Testing Strategies, Unit Testing, Integration Testing. Function Testing, Structural Testing, Class Based Testing Strategies, Use Case/Scenario Based Testing, Regression Testing, Performance Testing, System Testing, Acceptance Testing, Installation Testing, OO Test Design Issues, Test Case Design, Quality Assurance, Root Cause Analysis, Post-Mortem Analysis.	**[08 Hours]**

Textbook

1. Object-Oriented Software Engineering Practical software development using UML and Java, Timothy C. Lethbridge & Robert, Langaniere, Mcgraw-Hill
2. Object-Oriented Software Engineering: Using UML, Patterns and Java, Bernd Bruegge and Allen H. Dutoit, 2nd Edition, Pearson Education Asia.

Reference Books

1. Software Engineering: A Practitioner's Approach, Roger S Pressman
2. A Practical Guide to Testing Object-Oriented Software, John D. McGregor; David A. Sykes, Addison-Wesley Professional
3. Software Engineeing, K.K. Agarwal, New Age Publications 2008

COURSE OUTCOMES (COs)

On completion of the course, students are able to :

18CS54.1	Explain the basic concept of object oriented software engineering and Comprehend software development life cycle.
18CS54.2	Analyze and specify software requirements gathering to implementation.

18CS54.3	Implement the Unified Modeling Language and Use Case Modeling
18CS54.4	Construct a fundamental software project using UML
18CS54.5	Apply software design and development techniques.
18CS54.6	Analyze project management techniques through case study

Semester End Examination (SEE) Question paper pattern:

1. Eight questions are to be set covering entire syllabus. **(student shall answer 5 full question)**
   Q1 and Q2 are compulsory from UNIT 1 and UNIT 2 respectively.
   Q3 and Q4 from UNIT 3, Q5 and Q6 from UNIT 4, Q7 and Q8 from UNIT 5.
2. There shall be a maximum of three sub divisions under each question. Numerical problems shall be set wherever possible
3. Each question will carry **14 marks.**

18CS55- Parallel Computing Systems

Total Credits : 3 | **Total Contact Hours : 45**

L-T-P : 3-0-0 | **Contact Hours/week : 03**

IA Max Marks : 30 | **SEE Max Marks : 70**

Prerequisite : Data Communication and Computer Networks | **Course Type : Core**

COURSE OBJECTIVES

1. To Understand various basic concepts associated with parallel computing environments.
2. To Gain the experience in a number of different parallel computing paradigms including memory passing, memory sharing, data-parallel and other approaches.
3. To learn in designing and testing parallel computing solutions to programming problems.
4. To prepare students for a career in designing the computer systems of the future

Module	COURSE CONTENTS	HOURS ALLOTTED
1	**Introduction to Parallel Computing :** Motivating Parallelism, Scope of Parallel Computing, Implicit Parallelism: Trends in Microprocessor Architectures, Limitations of Memory System Performance, Dichotomy of Parallel Computing Platforms, Physical Organization of Parallel Platforms, Communication Costs in Parallel Machines.	**[09 Hours]**
2	**Principles of Parallel Algorithm Design & Analytical Modeling of Parallel Programs :** Preliminaries, Decomposition Techniques, Characteristics of Tasks and Interactions - Mapping Techniques for Load Balancing, Methods for Containing Interaction Overheads **Parallel Algorithm Models.** Analytical Modeling of Parallel Programs, Sources of Overhead in Parallel Programs, Performance Metrics for Parallel Systems, The Effect of Granularity on Performance, Scalability of Parallel Systems.	**[09 Hours]**
3	**Programming Using the Message-Passing Paradigm** Principles of Message-Passing Programming, The Building Blocks: Send and Receive Operations, MPI: the Message Passing Interface, Topologies and Embedding, Overlapping Communication with Computation, Collective Communication and Computation Operations, Groups and Communicators.	**[09 Hours]**

4	Thread Basics, Why Threads? , The POSIX Thread API, Thread Basics: Creation and Termination, Synchronization Primitives in Pthreads, Controlling Thread and Synchronization Attributes, Thread Cancellation, Composite Synchronization Constructs, Tips for Designing Asynchronous Programs.	**[09Hours]**
5	**OpenMP:** a Standard for Directive Based Parallel Programming, Dense Matrix Algorithms, Matrix-Vector Multiplication, Matrix-Matrix Multiplication - **Sorting:** Issues in Sorting on Parallel Computers, Sorting Networks, Bubble Sort and its Variants. Graph Algorithms: Definitions and Representation, Minimum Spanning Tree: Prim's Algorithm.	**[09 Hours]**

Textbook

1. Introduction to Parallel Computing , Ananth Grama, Anshul Gupta, George Karypis, Vipin Kumar, Second Edition, 2003, Pearson, Adison Wesley

Reference Books

1. Scalable Parallel Computing: Technology, Architecture, Programming Kai Hwang and Zhiwei Xu, 1998, Tata McGraw-Hill
2. Parallel Computer Organization and Design , Michel Dubois, MuraliAnnavaram, and Per Stenstrom, 2012 , Cambridge University Press
3. Parallel Programming Wilkinson and Allen, 2nd Edition, Prentice Hall
4. An Introduction to Parallel Programming, Peter S Pacheco, 2011 , Morgan Kaufmann
5. Using MPI : portable parallel programming with the message-passing interface, William Gropp, Ewing Lusk, Anthony Skjellum, 3rd Edition 2014, Cambridge MIT Press

COURSE OUTCOMES (COs)

On completion of the course, students are able to :

18CS55.1	Understand the basic concepts, design and engineering associated with parallel computing environments (L2)
18CS55.2	Explain the decomposition techniques and load balancing in parallel algorithm design (L2)
18CS55.3	Analyze the performance and issues of parallel computing systems (L4)
18CS55.4	Construct programs Using the Message-Passing Paradigm (L3)
18CS55.5	Construct programs using threads in Shared Address Space Platforms (L3)
18CS55.6	Demonstrate through parallel programs to execute matrix, sorting and graph related problems (L3)

Semester End Examination (SEE) Question paper pattern:

1. Eight questions are to be set covering entire syllabus. **(student shall answer 5 full question)**
   Q1 and Q2 are compulsory from UNIT 1 and UNIT 2 respectively.
   Q3 and Q4 from UNIT 3, Q5 and Q6 from UNIT 4, Q7 and Q8 from UNIT 5.
2. There shall be a maximum of three sub divisions under each question. Numerical problems shall be set wherever possible
3. Each question will carry **14 marks.**

18ESCS03 - Web Technology

Total Credits : 2 | **Total Contact Hours :60**

L-T-P : 0-0-4 | **Contact Hours/week : 04**

CA Max Marks : 100 | **SEE Max Marks : NA**

Prerequisite : Programming in JAVA | **Course Type : ES**

List of Programs for practice:

1. Create a personal web site with minimum 4 web pages using basic HTML tags.
2. Create a static E-commerce website using Advanced HTML tags.
3. Enhance Exercise-1 with style properties using Inline, internal and external CSS.
4. Enhance Exercise-2 with style properties using Inline, internal and external CSS.
5. Add scientific calculator as a menu in your Exercise-1 using java script.
6. Create registration form, login form for Exercise-2 and validate using java script.
7. Perform Event handling mechanisms Exercise-1 and 2.
8. Perform Form Handling and Form validation for Exercise-1 & 2 using PHP.
9. Create, store, retrieve and display the product details for Exercise 2 using PHP and MySQL.
10. Implement Sessions and cookies to store information to be used across multiple pages in Exercise-2.
11. Apply security features to your Web applications.
12. Create an ERP using any web development framework.

COURSE OUTCOMES (COs)

On completion of the course, students are able to :

18ESCS03.1	Demonstrate with simple web pages using basic and advanced HTML tags (L3)
18ESCS03.2	Examine the HTML Tags and It's different types with various (L4)
18ESCS03.3	Demonstrate with Event Handling and Form Validation using PHP. (L3)
18ESCS03.4	Design the web applications using Java Script along with form validation (L6)
18ESCS03.5	Develop websites and use Data base to store information through web pages at the backend (L6)
18ESCS03.6	Design web applications with security features.

Assessment and Evaluation

CA (Continuous Assessment): 40% is continuous evaluation (MCQ/Sample exercises) and 60 % is evaluated through mini project.

18CIC53L - Database Systems Laboratory

Total Credits :1 | **Total Contact Hours :30**

L-T-P : 0-0-2 | **Contact Hours/week : 02**

CA Max Marks : 100 | **SEE Max Marks : NA**

Prerequisite : Data Structures and Algorithms | **Course Type : Core**

Sl No	Program Title
	PART A
1.	Execute different Data Definition Language (DDL), Data Manipulation Language (DML), DCL, TCL commands on a sample database. DDL: CREATE, DROP, TRUNCATE,ALTER AND RENAME DML: INSERT, UPDATE AND DELETE
2.	Consider the Student Database consisting of four relations Students, Teachers , subjects and Grades. Create all the tables with necessary constraints. Students(**Sid int**, Name string) Teachers(**Tidint**, Name string) Subjects(**Subidint**, Name string) Grades(**studentID**int, **teachersID**int, **subjectID**int, grade string) **SCHEMA DIAGRAM** 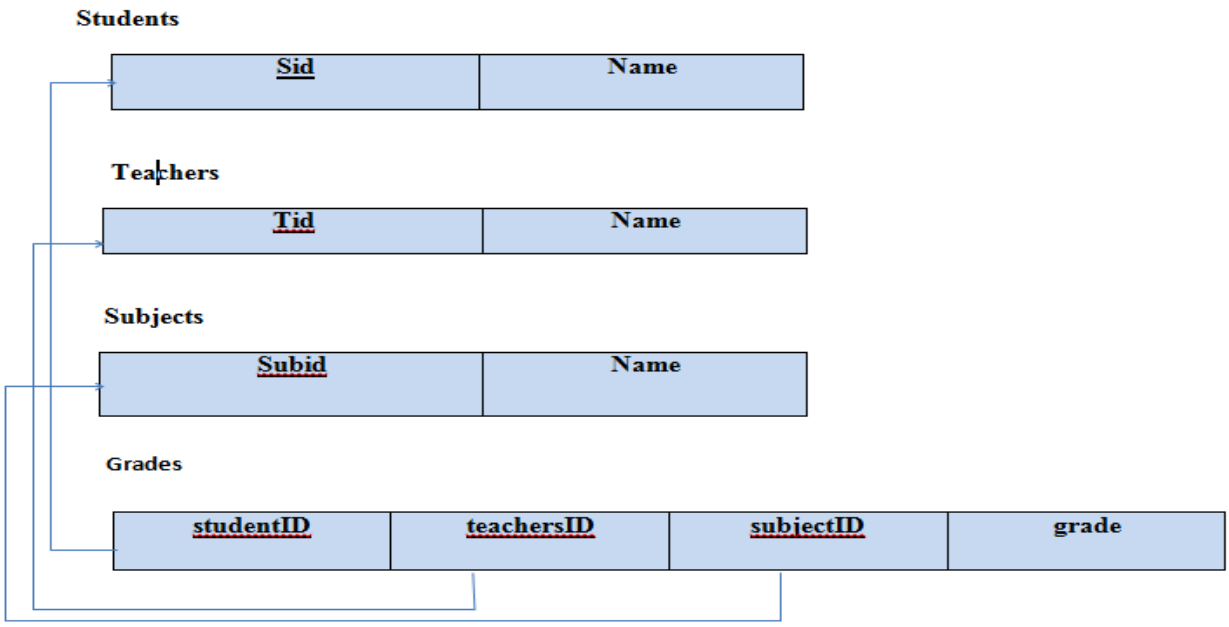

3.	Insert at least five tuples to all the relations of the Student database
4.	List the students as per their alphabetic order List the names of students in any class taught by Adams Names of teachers who taught Biology Retrieve the names of teachers who have not yet taught List the names of students who have not yet taken any classes List the names of students who have not yet taken any classes:
5.	Consider the Employee Database consisting of two relations Employees and department. Create all the tables with necessary constraints. **Database Scheme** 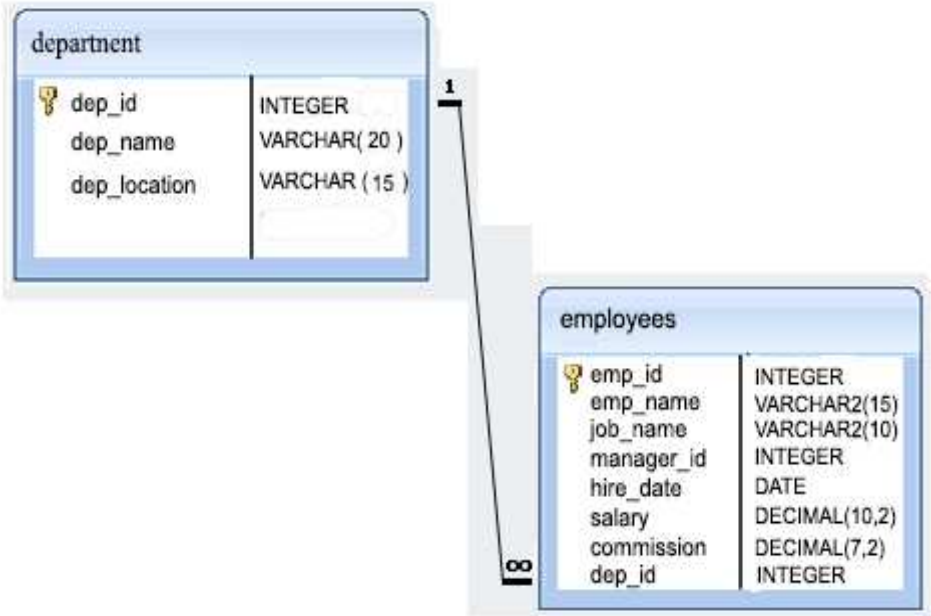
6.	Insert at least five tuples to all the relations of the Employee database
7.	Write a query in SQL to display the unique designations for the employees Write a query in SQL to produce the output of employees name and job name as a format of "Employee & Job" Write a query in SQL to list the employees with Hire date in the format like February 22, 1991 Write a query in SQL to count the no. of characters with out considering the spaces for each name. Write a query in SQL to list the employees who does not belong to department 102

8.	Write a query in SQL to display the average salaries of all the employees who works as HR. Write a query in SQL to list the employees whose salary will be more than 10000 after giving 25% increment. Write a query in SQL to list the employees who have joined in the year 2020. Write a query in SQL to list the employees along with department name. Write a query in SQL to list the employees, joined in the month FEBRUARY with a salary range between 1001 to 20000. Write a query in SQL to list the name, job name, manager id, salary, manager name, manager's salary for those employees whose salary is greater than the salary of their managers
9.	Write a query in SQL to list the employees whose manager name is Vamshi . Write a query in SQL to list the employees who are working either MANAGER or HR with a salary range between 20000 to 100000 without any commission. Write a query in SQL to list the employees who are senior to their own manager. Write a query in SQL to display the location of ISHIKA. Write a query in SQL to list the total information of employees table along with department, and location of all the employees working under marketing and HR in in the ascending department no. Write a query in SQL to list the details of the employees along with the details of their departments.
10.	Write a query in SQL to find the average salary and average total remuneration(salary and commission) for each type of job. Write a query in SQL to list the manager no and the number of employees working for those managers in ascending order on manager id. Write a query in SQL to list the department where at least two employees are working. Write a query in SQL to display the number of employee for each job in each department. Write a query in SQL to find the total annual salary distributed against each job in the year 1995. Write a query in SQL to list the employee id, name, salary, and department id of the employees in ascending order of salary who works in the department 1001
11.	Consider the LibraryDatabase consisting of six relations Publisher, Book, Book_Authors, Book_Copies, Book_lending and Library_Branch. Create all the tables with necessary constraints and insert at least five tuples to each relation. PUBLISHER (Name, Address, Phone) BOOK (Book_id, Title, Publisher_Name, Pub_Year) BOOK_AUTHORS (Book_id, Author_Name) BOOK_COPIES (Book_id, Branch_id, No-of_Copies) BOOK_LENDING (Book_id, Branch_id, Card_No, Date_Out, Due_Date) LIBRARY_BRANCH (Branch_id, Branch_Name, Address) **ER Diagram**

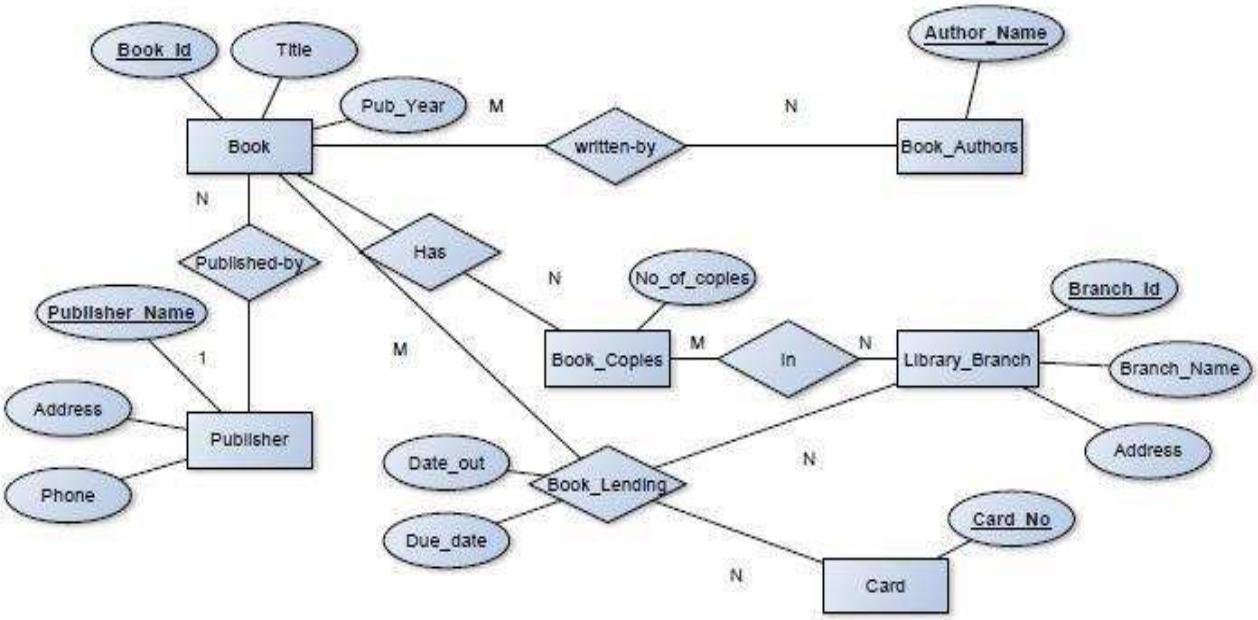

Schema Diagram

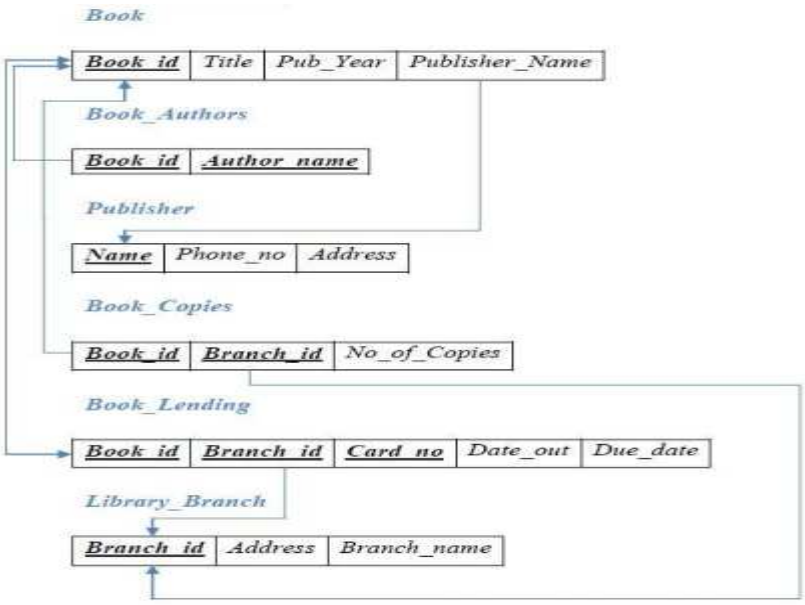

12. Retrieve details of all books in the library – id, title, name of publisher, authors, number of copies in each branch, etc.
Get the particulars of borrowers who have borrowed more than 3 books, but from Jan 2017 to Jun 2017
Delete a book in BOOK table. Update the contents of other tables to reflect this data manipulation operation.
Partition the BOOK table based on year of publication. Demonstrate its working with a simple query.
Create a view of all books and its number of copies that are currently available in the Library.

	PART B Mini project on database application using any programming language for front end design and Oracle as back end.

COURSE OUTCOMES (COs)

On completion of the course, students are able to :

18CIC53L.1	Apply Data Definition Language, Data Manipulation Language, Data Control Language and Transaction Control Language commands on sample database (L3)
18CIC53L.2	Construct a Student database with necessary constraints and to get it populated with the data (L3)
18CIC53L.3	Examine the execution of simple and complex queries on Student Database (L4)
18CIC53L.4	Examine the execution of simple and complex queries on Student Database (L4)
18CIC53L.5	Examine the execution of simple and complex queries on Library Management Database (L4)
18CIC53L.6	Develop a mini project for the benefits of society /community (L6)

Assessment and Evaluation

CA (Continuous Assessment) : Every experiment is evaluated for100 marks on weekly basis

Test1 : Conducted for 100 marks in the middle of the semester

Test2: Conducted for 100 marks towards end of the semester

Semester End Test : conducted for 100 marks (mini project demonstration) at the end of the semester

18CS55L - Parallel Computing Laboratory

Total Credits : 2 | **Total Contact Hours :30**

L-T-P : 0-0-2 | **Contact Hours/week : 02**

CA Max Marks : 100 | **SEE Max Marks : NA**

Prerequisite : | **Course Type : ES**

List of Exercises:

1. Write a C program to implement MPI primitives.
2. Write a C program to implement pthread primitives.
3. Write a C program which computes a **dense matrix product C=A*B**, using OpenMP for parallel execution.
4. C programs which demonstrate **how to compute CPU time or elapsed time** using OMP and identify the **critical section problem**.
5. C program which uses OpenMp to parallelize a simple example of **Dijkstra's minimum distance algorithm** for graphs.
6. C program which demonstrates **how to "multitask",** that is, to execute several unrelated and distinct tasks simultaneously, using OpenMP for parallel execution.
7. C Program which illustrates the Use of OpenMP API for carrying out parallel computing in a shared memory environment.
8. C Program which illustrates the Use of OpenMP API to implement mutual exclusion for work sharing environment.
9. C program to illustrate the **scheduling clause like static and dynamic** using OpenMP
10. Case studies on BigSim and NEST simulators.

COURSE OUTCOMES (COs)

On completion of the course, students are able to :

18CS55L.1	Implement the concept of parallel computing using OpenMP.(L3)
18CS55L.2	Implement Pthread primitives and MPI primitives (L3)
18CS55L.3	Develop programs that support scheduling clauses in OpenMP (L4)
18CS55L.4	Implement Matrix, Sorting and Graph programs in OpenMP(L3)

18CS55L.5	Develop programs that support multi-tasking in shared memory environment (L4)
18CS55L.6	Analyze BigSim and NEST simulators (L4)

Assessment and Evaluation

CA (Continuous Assessment) : Every experiment is evaluated for100 marks on weekly basis

Test1 : Conducted for 100 marks in the middle of the semester

Test2: Conducted for 100 marks towards end of the semester

Semester End Test : Conducted for 100 marks at the end of the semester

18CS57L - Network Simulator Laboratory

Total Credits : 2 | **Total Contact Hours :30**

L-T-P : 0-0-2 | **Contact Hours/week : 02**

CA Max Marks : 50 | **SEE Max Marks : NA**

Prerequisite : | **Course Type : SEC**

List of Exercises:

1. Initialize the Network and Configure a Subnet
2. Sketching the Network Topology and Networking Components and devices: LAN Adapters, Hubs, Switches, Routers
3. Implementation of file and printer sharing and designing and implementing Class A, B, C Networks
4. Subnet planning and its implementation
5. TCP one way / two way communication and UPD one way /two way communication
6. Program in NS3 to connect two nodes
7. Program in NS3 for connecting three nodes considering one node as a central node.
8. Program in NS3 to implement star topology and bus topology
9. Program in NS3 for connecting multiple routers and nodes and building a hybrid topology.
10. Installation and configuration of NetAnim
11. Program in NS3 to implement FTP using TCP bulk transfer.
12. Program in NS3 for connecting multiple routers and nodes and building a hybrid topology and then calculating network performance
13. To analyse network traces using wireshark software

COURSE OUTCOMES (COs)

On completion of the course, students are able to :

18CS57L.1	**Illustrate** the construction of networks and configure using with multiple classes of IP addresses configuration and also learning the various network components (L3)

18CS57L.2	**Demonstrate** the planning of subnetting with an example.
18CS57L.3	**Demonstrate** the one-way communication using TCP and UDP (L3)
18CS57L.4	**Illustrate** the working of various topologies using Network Simulator (L3)
18CS57L.5	**Discuss** the installation and configuration of NetAnim (l2)
18CS57L.6	**Test** the network traces using wireshark software (L4)

Assessment and Evaluation

CA (Continuous Assessment) : Every experiment is evaluated for100 marks on weekly basis

Test1 : Conducted for 100 marks in the middle of the semester

Test2: Conducted for 100 marks towards end of the semester

Semester End Test : Conducted for 100 marks at the end of the semester

18CS58L - Scripting Language Laboratory

Total Credits : 2	**Total Contact Hours :30**
L-T-P : 0-0-2	**Contact Hours/week : 02**
CA Max Marks : 50	**SEE Max Marks : NA**
Prerequisite :	**Course Type : SEC**

PYTHON PROGRAMMING: Beginning Python, Execution of a Python Program, Data types in Python, Operators, Input and Output, Control Statements, Arrays, Function, Modules in Python, Data Structures in Python, Lists and Tuples, Dictionaries, Strings, Files.

Programming in Advanced Python: Introduction to Oops, Classes and Objects, Inheritance and Polymorphism, Abstract Classes and Interfaces, Exceptions, Regular Expressions in Python.

Connectivity in Python: Introduction to Django, Using Web Services, Python's Database Connectivity, Graphical User Interface.

Exercises on:

1. Create modules using user-defined function.
2. Exercises on files in python.
3. Create a linked list.
4. Exercise on strings using list, tuples.
5. Exercise on class, inheritance, and polymorphism.
6. Convert list to tuples and tuples to dictionary by implementing on stack.
7. Programs on regular expression.
8. Implement GUI using python database connectivity making use of web services.

At the end students have to integrate all that they have implemented and come up with real world applications.

<u>Text Books:</u>

1. Mark Lutz, "Learning Python",5th Edition, O'Reilly publication.
2. Wiley Core Python Programming, 2ed by Dr.R. Nageshwara Rao.

3. Python Programming by Bradley N. Miller David L.Ranum.
4. Charles R. Severance, "Python For Everybody: Exploring Data using Python 3", 1st edition, CreateSpace Independent Publishing Platform, 2016.

Reference Books

1. Introducing Python- Modern Computing in Simple Packages – Bill Lubanovic, O'Reilly Publication
2. *How to Think Like a Scientist –Learning with Python ",*Allen Downey, Jeffrey Elkner, Chris Meyers,Green Tea Press, 2002, First Edition.
3. Introduction to Computer Science Using Python- Charles Dierbach, Wiley Publication *Learning with Python ",* Green Tea Press, 2002, First Edition.
4. Beginning Python –From Novice to Professional, - Magnus Lie Hetland, Second Edition, APress Publication.

COURSE OUTCOMES (COs)

On completion of the course, students are able to :

18CS58L.1	Demonstrate the working of functions and arguments passing in Python.(L3)
18CS58L.2	Show Python programs to read and write files (L3)
18CS58L.3	Implement object-oriented concepts with Python classes (L3)
18CS58L.4	Implement the lists, tuples, and dictionaries in Python programs (L3)
18CS58L.5	Analyzing the exception handling mechanisms in Python applications for error handling (L4)
18CS58L.6	Develop Python applications using django (L6)

Assessment and Evaluation

CA (Continuous Assessment) : Every experiment is evaluated for100 marks on weekly basis

Test1 : Conducted for 100 marks in the middle of the semester

Test2: Conducted for 100 marks towards end of the semester

Semester End Test : Conducted for 100 marks at the end of the semester

Semester - VI

18CIC61 - Advanced Computer Networks

Total Credits : 3 | **Total Contact Hours : 45**

L-T-P : 3-0-0 | **Contact Hours/week : 03**

IA Max Marks : 30 | **SEE Max Marks : 70**

Prerequisite: Data Communication and Computer Networks | **Course Type : Core**

COURSE OBJECTIVES

1. To Build an understanding of the fundamental concepts of computer networking
2. To Familiarize the student with the basic taxonomy and terminology of the computer networking area
3. To Understand state-of-the-art in network protocols, architectures, and applications
4. To Identify a router as a computer with an operating system (OS) and hardware designed for the routing process

Module	COURSE CONTENTS	HOURS ALLOTTED
1	**Networking Concepts:** Layered operation, Protocol Suites. **Application Layer:** Application layer functions and Application Layer protocols, HTTP, FTP, SMTP, Electronic mail, Domain name system DNS, World Wide Web	**[08 Hours]**
2	**The transport layer:** The Transport service, End-to-End Protocols, Elements of Transport protocols, Simple, transport protocol Transmission Control Protocol (TCP), Internet transport protocols, TCP Connection Establishment, TCP Flow Control, TCP Congestion Control, Weighted Fair Queuing (WFQ), Random Early detection (RED), Internet transport protocols TCP, User Datagram Protocol (UDP)	**[10 Hours]**
3	**Network Layer:** Static and Dynamic IP addressing, Public and Private Networks, IPV4, Limitations of current IPV4, Internet Protocol Version 6 (IPv6) features, DHCP, Routing and Packet Forwarding, Static Routing , **Introduction to Dynamic Routing Protocols**, Distance Vector Routing Protocol, RIPv1, Variable length sub-net mask - VLSM , Class less inter domain routing - CIDR , Routing Table-A Closer Look, EIGRP, Link State Routing Protocol, OSPF, Overview of BGP	**[10 Hours]**
4	**Link Layer and LAN:** Multiple access Networks ,ALOHSs, CSMA,	**[10 Hours]**

	CSMA/CD and CSMA/CA, Stability in Slotted ALOHA ,Bayesian Algorithm, - Splitting Algorithms – Tree and First Come First Serve FCFS Scheduling. Switch, VLANs, VLAN Trunk Protocol - VTP, Implement Spanning Tree Protocol, Inter-VLAN Routing, Wireless Router Services in Converged WAN, Point to Point Protocol, Frame Relay. **ATM Networks:** Introduction, ATM, The ATM AAL Layer Protocols, Historical perspective, protocol architecture.	
5	**Wi-Fi:** Topologies of wireless networks, world of Radio frequency, Framework and operation of 802.11 networks, Physical design of wireless networks, Introduction to antennas, security of 802.11 networks, Bluetooth. **Multimedia :**- RTP , Enterprise Network Security Assess Control List	**[07 Hours]**

Textbook

5. "Computer Networking, A Top-Down Approach Featuring the Internet", James F. Kurose and Keith W. Ross, 6th Ed, Addison-Wesley,2012.

Reference Books

1. "Data and Computer Communications", William Stallings, 10th Edition, Pearson Prentice Hall, 2013.
2. *"Data* Communications and *Networking"*, Behrouz A. *Forouzan,* 4th Edition, McGraw Hill, 2006
3. "Computer Networks – A System Approach", L. L. Peterson and B. S. Davie, 5th Edition, Elsevier,2011
4. "Computer Networks", Andrew S.Tanenbaum, 5th Edition, Prentice Hall of India, 2010

COURSE OUTCOMES (COs)

On completion of the course, students are able to :

18CIC61.1	Independently understand basic computer network technology and Identify the different types of network topologies and protocols.(L2)
18CIC61.2	Enumerate the layers of the OSI model and TCP/IP. Explain the function(s) of each layer.(L3)
18CIC61.3	Analyze and compare IPV4 and IPV6(L3)
18CIC61.4	Identify the different types of network devices and their functions within a network and Familiarity with the basic protocols, VLANs, VTP , WAN, ATM in

	a networks (L3)
18CIC61.5	Knowledge of contemporary issues in WIFI and 802.11 networks.(L3)
18CIC61.6	Design and simulate various Real time Simulations case study(L3)

Semester End Examination (SEE) Question paper pattern:

1. Eight questions are to be set covering entire syllabus. **(student shall answer 5 full question)**
   Q1 and Q2 are compulsory from UNIT 1 and UNIT 2 respectively.
   Q3 and Q4 from UNIT 3, Q5 and Q6 from UNIT 4, Q7 and Q8 from UNIT 5.
2. There shall be a maximum of three sub divisions under each question. Numerical problems shall be set wherever possible
3. Each question will carry **14 marks.**

18CS62 - Machine Learning

Total Credits : 3 | **Total Contact Hours : 45**

L-T-P : 3-0-0 | **Contact Hours/week : 03**

IA Max Marks : 30 | **SEE Max Marks : 70**

Prerequisite: - Probability, Statistics and random processes | **Course Type : Core**

COURSE OBJECTIVES

1. To familiarize the students to various Machine learning Algorithms**.**
2. To analyze the data, identify the problems, and choose relevant algorithms to apply.
3. To apply these algorithms for typical applications like Image and Speech Processing, Computer Vision, Finance, Health Care, etc., for society.
4. To carry out minor projects on application of Machine Learning Algorithms.

Module	COURSE CONTENTS	HOURS ALLOTTED
1	**Introduction to Machine Learning** (a) Machine Learning Techniques. (b) Familiarization of Data Analytics and Intelligent Learning Algorithms	**[09 Hours]**
2	**Regression, Classification** Regression Methods – (a) Linear Regression (b) Logistic Regression Classification Methods - (a) Naive Bayes. (b) K – Nearest Neighbor	**[08 Hours]**
3	**Dimensionality Reduction & Parameter Estimation** Dimensionality Reduction **–** Principal Component Analysis (PCA), Linear Discriminate Analysis (LDA). Parameter Estimation **-** Maximum Likelihood Estimate (MLE).	**[09 Hours]**
4	**Clustering & Reinforcement Methods** Clustering Methods - (a) K – Means Clustering (b) Hierarchical Clustering. (c) Gaussian Mixture Models. Reinforcement Methods – (a) Markov Decision Process (b) Q – Learning	**[09 Hours]**
5	**Perceptron & Artificial Neural Network** Perceptron - (a) Perceptron. (b) Multilayer Perceptron. Artificial Neural Network – (a) Multi – layer Artificial Neural network.	**[10 Hours]**

	(b) Back Propagation Learning. (c) Support Vector Machine (SVM).	

Textbook

1. Bishop, C., Pattern Recognition and Machine Learning, Springer 6e 2011
2. Haykin S., Neural Networks and Learning Machines, Third Edition, Prentice Hall, 2008.

Reference Books

1. Daumé, H. III, A Course in Machine Learning, 2015
2. Hastie, T., R. Tibshirani, J. Friedman, The Elements of Statistical Learning, Springer 2009

COURSE OUTCOMES (COs)

On completion of the course, students are able to :

18CS62.1	**Discuss** the fundamentals of Machine Learning, intelligent algorithms for data analysis.(L2)
18CS62.2	**Summarize** on techniques under supervised learning to solve the analytical problem.(L2)
18CS62.3	**Solve** the problem using Ensemble techniques (L3)
18CS62.4	**Apply** Dimensionality reduction techniques in solving problem.(L3)
18CS62.5	**Implement** suitable ML techniques and apply them for appropriate problems.(L3)
18CS62.6	**Explore** the performance of unsupervised and reinforcement technique.(L3)

Semester End Examination (SEE) Question paper pattern:

1. Eight questions are to be set covering entire syllabus. **(student shall answer 5 full question)**
   Q1 and Q2 are compulsory from UNIT 1 and UNIT 2 respectively.
   Q3 and Q4 from UNIT 3, Q5 and Q6 from UNIT 4, Q7 and Q8 from UNIT 5.
2. There shall be a maximum of three sub divisions under each question. Numerical problems shall be set wherever possible
3. Each question will carry **14 marks.**

18CS63 - Linux Internals

Total Credits : 3 | **Total Contact Hours : 45**

L-T-P : 3-0-0 | **Contact Hours/week : 03**

IA Max Marks : 30 | **SEE Max Marks : 70**

Prerequisite: Operating Systems | **Course Type : Core**

COURSE OBJECTIVES

1. To Understand the Linux Operating System's history and it's Architecture.
2. To study the Linux file structure and commands related to file modifications.
3. To Learn the Regular Expressions, I/O redirection in Linux environment.
4. To design Linux Scripting programs and study the process handling mechanism.

Module	COURSE CONTENTS	HOURS ALLOTTED
1	Introduction to Linux: Linux history, distributions, licensing, Linux commands: man pages, commands working with directories, absolute and relative paths commands working with files: file, touch, rm, cp, mv and rename, general purpose utilities: cal, date, script, who, tty, pwd, ps, uname	**[09 Hours]**
2	Linux commands working with file contents: head, tail, cat, tac, more, less and strings, more file attributes: hard links, symbolic links, fins, umask and inodes **The Linux file tree**: the root directory, binary directories, configuration directories, data directories, Commands and arguments: $PATH, echo, ls, env	**[09 Hours]**
3	Shell Variables, I/O redirection, pipes, filters, grep, sort, cut, sed, regular expressions: three different versions of regular expressions	**[09 Hours]**
4	Scripting introduction: sourcing a script, she-bang, variables, troubleshooting a script, scripting loops: if then else, if then elif, for loop, while loop, until loop	**[09 Hours]**
5	The process: Process basics, Mechanism of process creation, system processes, Process states and zombies, external and internal commands w.r.t process, Running jobs in background, nice, killing processes with signals	**[09 Hours]**

Textbooks

1.Linux Fundamentals Paul Cobbaut (e-book).

2. Unix Concepts and Applications, 4th Edition by Sumithaba das, 2017

COURSE OUTCOMES (COs)

On completion of the course, students are able to :

18CS63.1	Explain the Linux History, their Architecture and Linux commands related to files.
18CS63.2	Interpret all the Linux commands with respect to file contents.
18CS63.3	Demonstrate the Linux File Trees and it's structure.
18CS63.4	Produce Linux scripts using shell variables and different parameters.
18CS63.5	Construct Linux scripting programs and execute related commands.
18CS63.6	Demonstrate the process related commands in Linux environment.

Semester End Examination (SEE) Question paper pattern:

1. Eight questions are to be set covering entire syllabus. **(student shall answer 5 full question)**
   Q1 and Q2 are compulsory from UNIT 1 and UNIT 2 respectively.
   Q3 and Q4 from UNIT 3, Q5 and Q6 from UNIT 4, Q7 and Q8 from UNIT 5.
2. There shall be a maximum of three sub divisions under each question. Numerical problems shall be set wherever possible
3. Each question will carry **14 marks.**

18CS64 - Professional Ethics and IPR

Total Credits : 2 | **Total Contact Hours : 30**

L-T-P : 2-0-0 | **Contact Hours/week : 02**

IA Max Marks : 30 | **SEE Max Marks : 70**

Prerequisite: Business Communication and Presentation skills | **Course Type : Core**

COURSE OBJECTIVES

1. To create an awareness on Engineering Ethics and Human Values
2. To instill Moral and Social Values and Loyalty.
3. To Create awareness among engineers about their social responsibilities
4. To know IPR

Module	COURSE CONTENTS	HOURS ALLOTTED
1	**Scope and Aims of Engineering Ethics:** Senses of Engineering Ethics, variety of Moral Issues, Three types of Inquiry, Engineering ethics and Philosophy, Moral dilemmas, Moral Autonomy, Kohlberg's theory, Gilligan's theory, Consensus and Controversy. **Professions and Professionalism**: Professions, Membership Criteria, Persuasive Definitions, Multiple Motives, Models of Professional Roles, **Professional Ideas and Virtues**: Theories about virtues, Professional Responsibility, Integrity, Self-Respect, Senses of Responsibility.	**[06 Hours]**
2	**Theories about Right Action**: Utilitarianism, Duty Ethics, Right Ethics, Testing Ethical Theories, Self-interest and Ethical Egoism, Customs and Ethical Relativism, Religion and divine command Ethics, **Uses of Ethical Theories**.**Engineering as Experimentation** – Engineers as responsible Experimenters – Codes of Ethics – A Balanced Outlook on Law.	**[06 Hours]**
3	**Engineer's Responsibility for Safety:** Safety and Risk, Assessment of Safety and Risk – Risk Benefit Analysis and Reducing Risk **Responsibilities to Employers:** Respect for Authority, Collective Bargaining, Confidentiality, Conflicts of Interest – Occupational Crime, **Rights of Engineers**: Professional Rights, Employee Rights, Discrimination	**[06 Hours]**
4	**Intellectual Property:** An Introduction, Intellectual property Law, Patents: Sources of Patent Law, Subject matter of Patent Law. Rights under Patent Law, Patent Requirements, Limitations of Patent Rights.	**[06 Hours]**

5	**Patents:** Patent Search process, Application process**,** **Principles of Trademarks:** Acquiring Trademark Rights, Types of Marks, Strong versus weak Marks, **Trademark:** Selecting and evaluating a Trademark	**[06 Hours]**

Textbooks

1. "Ethics in Engineering", Mike W.Martin and Roland SChinzinger, Tata Mc Graw Hill, New Delhi, 2003
2. "Intellectual Property" , Richard Stim, Cengage Learning, 2007

Reference Books

1. Engineering Ethics", Charles B.Fleddermann, Pearson Prentice Hall, New Jersey, 2004.
2. J. Rabins, "Engineering Ethics"-Concepts and Cases", Charles E Haris, Micheal S. Pritchard and Michael, Cengagae Learning, 2009.

COURSE OUTCOMES (COs)

On completion of the course, students are able to :

18CS64.1	Understand the scope and aims of Engineering Ethics(L2)
18CS64.2	Express the importance of Professions, Professionalism, Professional ideas and virtues (L2)
18CS64.3	Use the Ethical theories about right action and codes of Ethics (L3)
18CS64.4	Demonstrate the Responsibility of Engineers towards safety and Responsibility of Employers towards employees (L3)
18CS64.5	Present the laws about Intellectual Property Right (L3)
18CS64.6	Apply the Application Process of Patents and Trademarks (L3)

Semester End Examination (SEE) Question paper pattern:

1. Eight questions are to be set covering entire syllabus. **(student shall answer 5 full question)**

   Q1 and Q2 are compulsory from UNIT 1 and UNIT 2 respectively.

   Q3 and Q4 from UNIT 3, Q5 and Q6 from UNIT 4, Q7 and Q8 from UNIT 5.
2. There shall be a maximum of three sub divisions under each question. Numerical problems shall be set wherever possible
3. Each question will carry **14 marks.**

18CIC61L - Computer Networks Laboratory

Total Credits : 1 | **Total Contact Hours : 30**

L-T-P : 0-0-2 | **Contact Hours/week : 02**

CA Max Marks : 100 | **SEE Max Marks : NA**

Prerequisite: Data Communication and Computer Networks | **Course Type : Core**

LIST OF EXPERIMENTS

1. **Study of Basic Networking**: Why Networks?, Topologies. Explanation on uses, Introduction to IP address and subnetting.
2. **Study of Devices on Networks:** Introduction to OSI Layer, Introduction to Network Devices, Layers for Network Devices, Introduction to Firewalls.
3. **Practical Sessions:** Crimping LAN Wires, Configuring Computers, Commands Testing.
4. **Network Creation:** Creating a small network.
5. Implementation of Static Routing.
6. Implementation of Dynamic Routing Protocols: RIP V1, RIP V2.
7. Implementation of DNS, DHC
8. Routing Table-A Closer Look
9. Lan Design
10. Configure a Switch
11. VLANs
12. Implement VTP
13. Implement Inter-VLAN Routing
14. Configure a Wireless Router

COURSE OUTCOMES (COs)

On completion of the course, students are able to :

18CIC61L.1	Configure IPv4 addressing and VLSM
18CIC61L.2	Design network for given specific requirements
18CIC61L.3	Implement Static, dynamic routing protocols like RIPv1,RIPv2, OSPF.
18CIC61L.4	Design VLAN, Inter VLAN, VTP protocols and Frame relay
18CIC61L.5	Do troubleshooting that a computer network has been properly configured
18CIC61L.6	Demonstrate working knowledge with Physical router and switches

Assessment and Evaluation

CA (Continuous Assessment) : Every experiment is evaluated for100 marks on weekly basis

Test1 : Conducted for 100 marks in the middle of the semester

Test2: Conducted for 100 marks towards end of the semester

Semester End Test : conducted for 100 marks at the end of the semester

18CS63L - Linux Internals Laboratory

Total Credits : 1 | **Total Contact Hours : 30**

L-T-P : 0-0-2 | **Contact Hours/week : 02**

CA Max Marks : 100 | **SEE Max Marks : NA**

Prerequisite: Operating Systems | **Course Type : Core**

I. Working with files:

1. List the files in the /bin directory
2. Display the type of file of /bin/cat, /etc/passwd and /usr/bin/passwd.
3. Create a directory ~/touched and enter it.
4. Create the files today.txt and yesterday.txt in touched.
5. Change the date on yesterday.txt to match yesterday's date.
6. Copy yesterday.txt to copy.yesterday.txt.
7. Rename copy.yesterday.txt to kim.
8. Create a directory called ~/testbackup and copy all files from ~/touched into it.
9. Use one command to remove the directory ~/testbackup and all files into it.

II. Working with file's attributes:

1. Display specific file attributes using ls with different arguments
2. Create hard link to a specific file and display
3. Create symbolic file to create a link to a file and display
4. Show the difference between hard link and symbolic links
5. Display inode of every file

III. Working with file contents:

1. Display the first 12 lines of **/etc/services**.
2. Display the last line of **/etc/passwd**.
3. Use cat to create a file named **count.txt** that looks like this:
4. Use **cp** to make a backup of this file to **cnt.txt**.
5. Use **cat** to make a backup of this file to **catcnt.txt**.
6. Display **catcnt.txt**, but with all lines in reverse order (the last line first).
7. Use more to display **/etc/services**.
8. Display the readable character strings from the **/usr/bin/passwd** command.
9. Use **ls** to find the biggest file in **/etc**.
10. Open two terminal windows (or tabs) and make sure you are in the same directory in both. Type **echo this is the first line > tailing.txt** in the first terminal, then issue **tail –f tailing.txt** in the second terminal. Now go back to the first terminal and type **echo This is**

another line >> tailing.txt (note the double >>), verify that the **tail -f** in the second terminal shows both lines. Stop the **tail -f** with **Ctrl-C**.
11. Use **cat** to create a file named **tailing.txt** that contains the contents of **tailing.txt** followed by the contents of **/etc/passwd**.
12. Use **cat** to create a file named **tailing.txt** that contains the contents of **tailing.txt** preceded by the contents of **/etc/passwd**.

IV. Working with shell variables:
1. Use echo to display Hello followed by your username. (use a bash variable!)
2. Create a variable **answer** with a value of **42**.
3. Copy the value of $LANG to $MyLANG.
4. List all current shell variables.
5. List all exported shell variables.
6. Do the **env** and **set** commands display your variable ?
6. Destroy your **answer** variable.
7. Create two variables, and **export** one of them.
8. Display the exported variable in an interactive child shell.
9. Create a variable, give it the value 'Dumb', create another variable with value 'do'. Use **echo** and the two variables to echo Dumbledore.
10. Find the list of backslash escaped characters in the manual of bash. Add the time to your **PS1** prompt.

V. Working with input/output redirection:
1. Activate the **noclobber** shell option.
2. Verify that **noclobber** is active by repeating an **ls** on **/etc/** with redirected output to a file.
3. When listing all shell options, which character represents the **noclobber** option ?
4. Deactivate the **noclobber** option.
5. Make sure you have two shells open on the same computer. Create an empty **tailing.txt** file. Then type **tail -f tailing.txt**. Use the second shell to **append** a line of text to that file. Verify that the first shell displays this line.
6. Create a file that contains the names of five people. Use **cat** and output redirection to create the file and use a **here document** to end the input.

COURSE OUTCOMES (COs)

On completion of the course, students are able to :

18CS63L.1	Demonstrate with UNIX system files and understand it's system directory structure (L3)
18CS63L.2	Demonstrate the commands on UNIX file attributes (L3)
18CS63L.3	Illustrate with Linux commands with respect to the contents of any file (L3)

18CS63L.4	Design the shell script programs having variables and programming constructs (L4)
18CS63L.5	Demonstrate with regular expressions through Shell scripts available in Linux (L3)
18CS63L.6	Illustrate with Input/Output Redirection and process control mechanism, Socket programming (L3)

Assessment and Evaluation

CA (Continuous Assessment) : Every experiment is evaluated for100 marks on weekly basis

Test1 : Conducted for 100 marks in the middle of the semester

Test2: Conducted for 100 marks towards end of the semester

Semester End Test : conducted for 100 marks at the end of the semester

18CS67L - Software Engineering and Testing Laboratory

Total Credits : 1	**Total Contact Hours : 30**
L-T-P : 0-0-2	**Contact Hours/week : 02**
CA Max Marks : 100	**SEE Max Marks : NA**
Prerequisite: NA	**Course Type : Core**

LIST OF EXPERIMENTS

1. Write programs in ‗C' Language to demonstrate the working of the following constructs: i) do...while ii) while….do iii) if…else iv) switch v) for
2. A program written in ‗C' language for Matrix Multiplication fails Introspect the causes for its failure and write down the possible reasons for its failure.
3. Take any system (e.g. ATM system) and study its system specifications and report the various bugs.
4. Write the test cases for any known application (e.g. Banking application)
5. Create a test plan document for any application (e.g. Library Management System)
6. Study of any testing tool (e.g. Win runner)
7. Study of any web testing tool (e.g. Selenium)
8. Study of any bug tracking tool (e.g. Bugzilla, bugbit)
9. Study of any test management tool (e.g. Test Director)
10. Study of any open source-testing tool (e.g. Test Link)
11. Take a mini project (e.g. University admission, Placement Portal) and execute it. During the Life cycle of the mini project create the various testing documents* and final test report document.

*Note: To create the various testing related documents refer to the text **"Effective Software Testing Methodologies by William E. Perry"**‖

<u>Case Tools</u>

Students are divided into batches of 5 each and each batch has to draw the following diagrams using UML for an ATM system whose description is given below. UML diagrams to be developed are:

1. Use Case Diagram.
2. Class Diagram.
3. Sequence Diagram.
4. Collaboration Diagram.
5. State Diagram
6. Activity Diagram.
7. Component Diagram
8. Deployment Diagram.
9. Test Design.

COURSE OUTCOMES (COs)

On completion of the course, students are able to :

18CS67L.1	Prepare SRS document, design document, test cases.
18CS67L.2	Classify software applications and Identify unique features of various domains.
18CS67L.3	Translate a requirement specification into an implementable design, following a structured and organized process
18CS67L.4	Employ group working skills including general organization, planning and time management and inter group negotiation.
18CS67L.5	Formulate testing strategy for a software system, employing techniques such as unit testing, functional testing.
18CS67L.6	Apply quality attributes in software development life cycle

Assessment and Evaluation

CA (Continuous Assessment) : Every experiment is evaluated for100 marks on weekly basis

Test1 : Conducted for 100 marks in the middle of the semester

Test2: Conducted for 100 marks towards end of the semester

Semester End Test : conducted for 100 marks at the end of the semester

18CSDE651 - Network Programming and Management

Total Credits : 3 | **Total Contact Hours : 45**

L-T-P : 3-0-0 | **Contact Hours/week : 03**

IA Max Marks : 30 | **SEE Max Marks : 70**

Prerequisite: Advanced Computer Networks | **Course Type : DE**

COURSE OBJECTIVES

1. To Learn the basics of Socket programming using TCP Sockets
2. To Learn about socket options
3. To Learn to develop macros for including objects in MIB Structure
4. To Understand SNMP v1, v2 and v3 protocol and practical issues.

Module	COURSE CONTENTS	HOURS ALLOTTED
1	**ELEMENTARY TCP SOCKETS** Introduction to Socket Programming – Overview of TCP/IP Protocols – Introduction to Sockets – Socket address Structures – Byte ordering functions – address conversion functions – Elementary TCP Sockets – socket, connect, bind, listen, accept, read, write, close functions – Iterative Server – Concurrent Server.	**[09 Hours]**
2	**APPLICATION DEVELOPMENT** TCP Echo Server – TCP Echo Client – POSIX Signal handling – Server with multiple clients – boundary conditions: Server process Crashes, Server host Crashes, Server Crashes and reboots, Server Shutdown – I/O multiplexing – I/O Models – select function – shutdown function – TCP echo Server (with multiplexing) – poll function – TCP echo Client (with Multiplexing).	**[09 Hours]**
3	**SOCKET OPTIONS, ELEMENTARY UDP SOCKETS** Socket options – getsocket and setsocket functions – generic socket options – IP socket options – ICMP socket options – TCP socket options – Elementary UDP sockets – UDP echo Server – UDP echo Client – Multiplexing TCP and UDP sockets – Domain name system – gethostbyname function – Ipv6 support in DNS – gethostbyadr function – getservbyname and getservbyport functions.	**[09 Hours]**
4	**ADVANCED SOCKETS**	**[09 Hours]**

	Ipv4 and Ipv6 interoperability – threaded servers – thread creation and termination – TCP echo server using threads – Mutexes – condition variables – raw sockets – raw socket creation – raw socket output – raw socket input – ping program – trace route program.	
5	**SIMPLE NETWORK MANAGEMENT** SNMP network management concepts – SNMP management information – standard, MIB's – SNMPv1 protocol and Practical issues – introduction to RMON, SNMPv2, and SNMPv	**[09 Hours]**

Textbooks

1. Unix Network Programming Vol-I , W. Richard Stevens, Third Edition, 2003, PHI
2. SNMP, SNMPv2, SNMPv3 and RMON1 and 2, William Stallings, , Third Edition, 2007, Pearson Edition

Reference Books

1. Internetworking with TCP/IP Vol- III: Client Server Programming and Application BSD Sockets Version , D.E. Comer , Second Edition, 2003, Pearson Edition
2. Network Management: Principles and Practice, Mani Subramaniam, First Edition, 2001, Addison Wesely

COURSE OUTCOMES (COs)

On completion of the course, students are able to :

18CSDE651.1	Discuss the knowledge on socket programming
18CSDE651.2	Design and Develop applications using TCP sockets
18CSDE651.3	Analyze various socket options and explore UDP sockets
18CSDE651.4	Deploy socket programming to perform interoperability
18CSDE651.5	Analyze the need of network management and its practical issues.
18CSDE651.6	Implement any network applications using Socket programming

Semester End Examination (SEE) Question paper pattern:

1. Eight questions are to be set covering entire syllabus. **(student shall answer 5 full question)**
   Q1 and Q2 are compulsory from UNIT 1 and UNIT 2 respectively.
   Q3 and Q4 from UNIT 3, Q5 and Q6 from UNIT 4, Q7 and Q8 from UNIT 5.
2. There shall be a maximum of three sub divisions under each question. Numerical problems shall be set wherever possible
3. Each question will carry **14 marks.**

18CSDE652 – Advances in DBMS

Total Credits : 3 | **Total Contact Hours : 45**

L-T-P : 3-0-0 | **Contact Hours/week : 03**

IA Max Marks : 30 | **SEE Max Marks : 70**

Prerequisite: Database Systems, Operating Systems | **Course Type : DE**

COURSE OBJECTIVES

1. To give students in depth information about system implementation techniques, data storage, representing data elements, database system architecture
2. To gain the knowledge of Distributed Databases and their architectures.
3. To explore NOSQL systems
4. To understand the of Concepts of Information Retrieval

Module	COURSE CONTENTS	HOURS ALLOTTED
1	Motivating Example, Structured Data types, Database design for ORDBMS, OODBMS, Comparing RDBMS, OODBMS and ORDBMS.	[09 Hours]
2	**Disk Storage, Basic File Structures and Hashing** Introduction, Secondary Storage Devices, Buffering of Blocks, Placing File Records on Disk, Operations on Files, Files of Unordered Records (Heap Files), Files of Ordered Records (Sorted Files), Other primary files organization.	[09 Hours]
3	**Distributed Database Concepts** Data Fragmentation, Replication and Allocation Techniques for Distributed Database Design, Overview of concurrency and recovery in Distributed Database Design, Overview of **Transaction Management** in Distributed Databases, Query processing and optimization, Types of Database Systems, Distributed Database Systems and Architectures	[09 Hours]
4	**NOSQL Databases and Big Data** Introduction, The CAP theorem, Document based NOSQL systems and MongoDB, NOSQL Key-Value Stores, Column-Based or Wide Column NOSQL systems , NOSQL Graph Databases and Neo4j.	[09 Hours]
5	**Introduction to Information Retrieval and Web Search** Information Retrieval (IR) Concepts, Retrieval models, Types of	[09 Hours]

	queries in IR systems, Text processing, Inverted Indexing, Evaluation measures of Search Relevance, Web search and analysis, Trends in IR.	

Textbooks

1. Fundamentals of Database Systems, RamezElmasri and Shamkant B. Navathe, 7th Edition, 2017, Pearson.
2. Database Management Systems, Raghu Ramakrishnan,Johannes Gehrke, 3rd Edition, Mc-GrawHill

Reference Books

1. SilberschatzKorth and Sudharshan, SilberschatzKorth and Sudharshan , 6th Edition, 2013, Mc-GrawHill
2. Database Principles Fundamentals of Design Implementation and Management, Coronel, Morris, and Rob, 2012, Cengage Learning

COURSE OUTCOMES (COs)

On completion of the course, students are able to :

18CSDE652.1	Explain the overview of Object Database Concepts and their design.
18CSDE652.2	Discuss the concepts of disk storage and operations on files.
18CSDE652.3	Express the different Distributed Database Concepts.
18CSDE652.4	Summarize the concepts of Transaction management in Distributed Databases.
18CSDE652.5	Apply NOSQL queries using Mongo DB.
18CSDE652.6	Discuss the concepts of Information Retrieval and to analyze the trends in Information Retrieval.

Semester End Examination (SEE) Question paper pattern:

1. Eight questions are to be set covering entire syllabus. **(student shall answer 5 full question)**
   Q1 and Q2 are compulsory from UNIT 1 and UNIT 2 respectively.
   Q3 and Q4 from UNIT 3, Q5 and Q6 from UNIT 4, Q7 and Q8 from UNIT 5.
2. There shall be a maximum of three sub divisions under each question. Numerical problems shall be set wherever possible
3. Each question will carry **14 marks.**

18CSDE653 – Mobile Computing

Total Credits : 3 | **Total Contact Hours : 45**

L-T-P : 3-0-0 | **Contact Hours/week : 03**

IA Max Marks : 30 | **SEE Max Marks : 70**

Prerequisite: Advanced Computer Networks | **Course Type : DE**

COURSE OBJECTIVES

1. To make the student understand the concept of mobile computing paradigm, its novel applications and limitations.
2. To understand the typical mobile networking infrastructure through a popular GSM protocol
3. To understand the issues and solutions of various layers of mobile networks, namely MAC layer, Network Layer & Transport Layer
4. To understand the platforms and protocols used in mobile environment

Module	COURSE CONTENTS	HOURS ALLOTTED
1	**Mobile Devices And Systems, Architectures:** Mobile phones, Handheld Devices, Operating Systems, Limitations of Mobile Devices. GSM – Services and System Architectures, Radio Interfaces, Protocols, Localization, Calling, Handover, General Packet **CDMA based communication and Mobile IP Network Layer:** ntroduction to CDMA – based Systems, IP and Mobile IP Network Layers Packet Delivery and Handover Management, Location Management, Registration, Tunneling and Encapsulation	**[10 Hours]**
2	**Databases:** Database Hoarding Techniques, Data Caching, Client – Server Computing and Adaptation, Transactional Models, Query Processing, Data Recovery Process, Issues relating to Quality of Service.	**[10 Hours]**
3	**Data Synchronization in Mobile Computing Systems:** Synchronization, Synchronization Protocols, SyncML – Synchronization Language for Mobile Computing, Synchronized Multimedia Markup Language (SMIL).	**[07 Hours]**
4	**Data Dissemination and Broadcasting Systems:** Communication Asymmetry, Classification of Data – Delivery Mechanisms, Data Dissemination Broadcast Models, Digital Audio Broadcasting,	**[09 Hours]**

	Digital video Broadcasting **Getting started with Mobility:** Mobility landscape, Mobile platforms, Mobile apps development, Overview of Android platform, setting up the mobile app development environment along with an emulator, a case study on Mobile app development	
5	**Building blocks of mobile apps :** App user interface designing – mobile UI resources (Layout, UI elements, Draw-able, Menu), Activity- states and life cycle, interaction amongst activities. App functionality beyond user interface - Threads, Async task, Services – states and life cycle, Notifications, Broadcast receivers, Telephony and SMS APIs.	**[09 Hours]**

Textbooks

1. Mobile Computing , Raj Kamal, Oxford University Press, 2007.
2. Mobile Apps Development , Anubhav Pradhan, Anil V Deshpande, Edition I

Reference Books

1. Mobile Computing: Technology, Applications and Service Creation**,** Asoke K. Talkukder, Roopa R Yavaga, Tata McGraw Hill, 2005
2. Mobile Computing Principles: Designing and Developing Mobile Applications with UML and XML, Reza B'Far, 5th Edition, Cambridge University press, 2006

COURSE OUTCOMES (COs)

On completion of the course, students are able to :

18CSDE653.1	Discuss the concepts of Mobile Devices and Systems, Architectures (L2)
18CSDE653.2	Analyze the concepts of CDMA based communication and Mobile IP Network Layer. (L4)
18CSDE653.3	Apply different Databases Techniques and Data Synchronization in Mobile Computing Systems. (L3)
18CSDE653.4	Classify Data Dissemination and Broadcasting Systems. (L 3)
18CSDE653.5	Implement Mobile apps development for real time applications. (L3)
18CSDE653.6	Select the Building blocks of mobile applications. (L5)

Semester End Examination (SEE) Question paper pattern:

1. Eight questions are to be set covering entire syllabus. **(student shall answer 5 full question)**
   Q1 and Q2 are compulsory from UNIT 1 and UNIT 2 respectively.
   Q3 and Q4 from UNIT 3, Q5 and Q6 from UNIT 4, Q7 and Q8 from UNIT 5.
2. There shall be a maximum of three sub divisions under each question. Numerical problems shall be set wherever possible
3. Each question will carry **14 marks.**

18CSDE654 – Image Processing

Total Credits : 3 | **Total Contact Hours : 45**

L-T-P : 3-0-0 | **Contact Hours/week : 03**

IA Max Marks : 30 | **SEE Max Marks : 70**

Prerequisite: Linear Algebra | **Course Type : DE**

COURSE OBJECTIVES

1. To Describe and explain basic principles of digital image processing
2. To Design and implement algorithms that perform basic image processing
3. To Study color image processing techniques

Module	COURSE CONTENTS	HOURS ALLOTTED
1	**Image Fundamentals** Image representation, Image digitization, Digital image properties, color images, Neighbors of a pixel, Adjacency, connectivity, regions, boundaries, distance measures.	**[08 Hours]**
2	**Image analysis** Why computer vision is difficult?, Image analysis tasks, levels of data representation, traditional image data structures, hierarchical data structures, Array versus matrix operations, Linear versus nonlinear operations, arithmetic operations, spatial operations, vector and matrix operations, image transforms, probabilistic methods.	**[10 Hours]**
3	**Image Preprocessing** Histogram processing, Fundamentals of spatial filtering, smoothing spatial filters, sharpening spatial filters, basics of filtering in frequency domain, smoothing and sharpening using frequency domain, selective filtering.	**[10 Hours]**
4	**Image Segmentation** Thresholding, Edge-based segmentation, region based segmentation, Fuzzy segmentation, Graph cut segmentation, Active contour models, Evaluation issues in segmentation	**[10 Hours]**
5	**Color image processing** Color fundamentals, color models, pseudo color image processing, color transformations, smoothing and sharpening, image segmentation based on color, noise in color images.	**[07 Hours]**

Textbooks

1. Image processing, Analysis and Machine vision , Milan Sonka, VaclabHlavac, Roger Boyle, Third Edition, Thomson.
2. Digital Image Processing, Rafael.C.Gonzalez, Richard E. Woods, Third Edition, Perason

Reference Books

1. Fundamentals of Digital Image Processing , A.K.Jain, 1995, PHI
2. T he Image Processing Handbook, J.C. Russ, Fifth, 2003, Prentice Hall

COURSE OUTCOMES (COs)

On completion of the course, students are able to :

18CSDE654.1	**Discuss** the fundamental concepts of image processing (L2)
18CSDE654.2	**Select** the Linear Algebra operations to apply in Image Processing applications.(L2)
18CSDE654.3	**Summarize** the different denoising and filtering techniques(L2)
18CSDE654.4	**Use** the basic Histogram techniques to solve image processing related problems.(L3)
18CSDE654.5	**Demonstrate** the concepts of segmentation in the real-world problem using MATLAB/Python.(L3)
18CSDE654.6	**Illustrate** the concepts of color space using related algorithms.(L3)

Semester End Examination (SEE) Question paper pattern:

1. Eight questions are to be set covering entire syllabus. **(student shall answer 5 full question)**
   Q1 and Q2 are compulsory from UNIT 1 and UNIT 2 respectively.
   Q3 and Q4 from UNIT 3, Q5 and Q6 from UNIT 4, Q7 and Q8 from UNIT 5.
2. There shall be a maximum of three sub divisions under each question. Numerical problems shall be set wherever possible
3. Each question will carry **14 marks.**

18CSDE661 - Cryptography and Network security

Total Credits : 3 | **Total Contact Hours : 45**

L-T-P : 3-0-0 | **Contact Hours/week : 03**

IA Max Marks : 30 | **SEE Max Marks : 70**

Prerequisite: Data Communication and computer networks | **Course Type : DE**

COURSE OBJECTIVES

1. To Understand OSI security architecture and classical encryption techniques.
2. To Acquire fundamental knowledge on the concepts of finite fields and number theory.
3. To Understand various block cipher and stream cipher models.
4. To Describe the principles of public key cryptosystems, hash functions and digital signature

Module	COURSE CONTENTS	HOURS ALLOTTED
1	**Introduction & Number Theory** Services, Mechanisms and attacks-the OSI security architecture-Network security mode - Conventional Encryption: Conventional Encryption Model – Steganography. Number Theory: Euclid's algorithm - Finite fields - Polynomial Arithmetic – Prime numbers - Fermat's and Euler's theorem-Testing for primality -The Chinese remainder theorem	**[09 Hours]**
2	**Block Cipher and Public Key Cryptography** Classical Encryption Techniques – Simplified DES – Block Cipher Principles – The Data Encryption Standard – The Strength of DES – Block Cipher Design Principles – Block Cipher Modes of operation – Principles of Public Key Cryptosystems – The RSA Algorithm – Key Management – Diffie Hellman Key Exchange – Elliptic Curve Cryptography	**[09 Hours]**
3	**Hash Functions and Digital Signatures** Message Authentication and Hash Functions Authentication Requirements – Authentication Functions – Message Authentication Codes – Hash Functions – Security of Hash Functions. Hash and Mac Algorithms MD5 Message Digest Algorithm – Secure Hash Algorithm – RIPEMD – HMAC Digital Signatures and Authentication Protocols. Digital Signatures – Authentication Protocols – Digital Signature Standard - EI Gamal.	**[09 Hours]**
4	**Security Practice & System Security** Authentication applications – Kerberos – X.509 Authentication	**[09 Hours]**

	services - Internet Firewalls for Trusted System: Roles of Firewalls – Firewall related terminology- Types of Firewalls - Firewall designs - SET for E-Commerce Transactions. Intruder – Intrusion detection system – Virus and related threats – Countermeasures – Firewalls design principles – Trusted systems	
5	**Application Layer Security** E-Mail Security – PGP – S/MIME, IP Security, Web Security	**[09 Hours]**

Textbooks

1. Cryptography and Network Security, William Stallings, 6th Edition, March 2013. Perason Education

Reference Books

1. Cryptography & Network Security , Behrouz A. Ferouzan, 2007, Tata Mc Graw Hill
2. Data and Computer Communications, Behrouz A. *Forouzan,* 4th Edition, 2006, Tata Mc Graw Hill

COURSE OUTCOMES (COs)

On completion of the course, students are able to :

18CSDE661.1	Explain the foundations of Cryptography and network security(l2)
18CSDE661.2	Examine the knowledge of symmetric key and asymmetric key cryptographic algorithms and its various issues.(L4)
18CSDE661.3	Analyze and apply the various hash functions and digital signatures(L4)
18CSDE661.4	Analyze existing authentication protocols for two party communications and key agreement algorithms.(L4)
18CSDE661.5	Examine network security designs using available secure solutions.(L4)
18CSDE661.6	Examine the original research in network security and advanced security issues & technologies(L4)

Semester End Examination (SEE) Question paper pattern:

1. Eight questions are to be set covering entire syllabus. **(student shall answer 5 full question)**
   Q1 and Q2 are compulsory from UNIT 1 and UNIT 2 respectively.
   Q3 and Q4 from UNIT 3, Q5 and Q6 from UNIT 4, Q7 and Q8 from UNIT 5.
2. There shall be a maximum of three sub divisions under each question. Numerical problems shall be set wherever possible
3. Each question will carry **14 marks.**

18CSDE662 - Cloud Computing

Total Credits : 3 | **Total Contact Hours : 45**

L-T-P : 3-0-0 | **Contact Hours/week : 03**

IA Max Marks : 30 | **SEE Max Marks : 70**

Prerequisite: Data Communication and Computer Networks | **Course Type : DE**

COURSE OBJECTIVES

1. To gain Knowledge of Cloud Computing concepts, technologies, architecture and applications by introducing and researching state-of-the-art in Cloud Computing fundamental issues, technologies, applications and implementations.
2. To Understanding Services, Applications by Type and Virtualization.
3. To Manage the Cloud Resource, Scheduling and understating cloud security.
4. To Understand Cloud Based Storage & Case Study's.

Module	COURSE CONTENTS	HOURS ALLOTTED
1	**Introduction:** Network centric computing and network centric content, Peer-to-peer systems, Cloud Computing: an old idea whose time has come, Cloud Computing delivery models & Services, Ethical issues, Cloud vulnerabilities, Challenges.	**[09 Hours]**
2	**Understanding Services and Applications by Type:**IaaS, PaaS, SaaS and other services.Amazon, Google, Azure & Online Services, open source private clouds. Storage diversity and vendor lock-in, inter cloud, Energy use & ecological impact of data centers, service level and compliance level agreement, Responsibility sharing, user experience, Software Licensing.	**[09 Hours]**
3	**Cloud Resource Virtualization:** Layering and virtualization, Virtual machine monitors, Virtual machines Performance and security isolation, Full virtualization and paravirtualization, Hardware support for virtualization Case study: *Xen* -a VMM based on paravirtualization, Optimization of network virtualization in *Xen* 2.0, *vBlades* -paravirtualization targeting a *x86-64* Itanium processor, A performance comparison of virtual machines, Virtual machine security, The darker side of virtualization, Software fault isolation.	**[09 Hours]**
4	**Cloud Resource Management and Scheduling:** Policies and mechanisms for resource management, Applications of control theory to task scheduling on a cloud, Stability of a two-level	**[09 Hours]**

	resource allocation architecture, Feedback control based on dynamic thresholds, Coordination of specialized autonomic performance managers, A utility-based model for cloud-based web services, Resource bundling.	
5	Combinatorial auctions for cloud resources, Scheduling algorithms for computing clouds. **Storage systems:** Evolution, Storage models, file systems, databases, DFS, General parallel File system. **Cloud security:** Risks, privacy and privacy impacts assessments.	**[09 Hours]**

Textbooks

1. ***"Cloud Computing: Theory and Practice"***, Dan Marinescu, , 1st Edition, MK Publishers, 2013.

Reference Books

1. ***"Cloud Computing: Bible"*,** Barrie Sosinsky, 1st Edition, 2011, Wiley
2. ***" Cloud Computing : A Practical Approach"*** , Anthony T. Velte, Toby J. Velte and Robert Elsenpeter, 1stEdition, McGraw-Hill ,2010

COURSE OUTCOMES (COs)

On completion of the course, students are able to :

18CSDE662.1	Understand the main concepts, key technologies, strengths, and limitations of cloud computing and the possible applications for state-of-the-art cloud computing.(L2)
18CSDE662.2	Identify the architecture and infrastructure of cloud computing, including SaaS, PaaS, IaaS, public cloud, private cloud, hybrid cloud, etc.(L2)
18CSDE662.3	Analysis the core issues of cloud computing such as security, privacy, and interoperability.(L4)
18CSDE662.4	Compare virtualization tools to understand different types of hypervisors and create VM's (L4)
18CSDE662.5	Identify problems, and explain, analyze, and evaluate various cloud computing solutions. (L2)
18CSDE662.6	Discuss new ideas and innovations in cloud computing (L2)

Semester End Examination (SEE) Question paper pattern:

1. Eight questions are to be set covering entire syllabus. **(student shall answer 5 full question)**
   Q1 and Q2 are compulsory from UNIT 1 and UNIT 2 respectively.
   Q3 and Q4 from UNIT 3, Q5 and Q6 from UNIT 4, Q7 and Q8 from UNIT 5.
2. There shall be a maximum of three sub divisions under each question. Numerical problems shall be set wherever possible
3. Each question will carry **14 marks.**

18CSDE663 - Algorithms

Total Credits : 3 | **Total Contact Hours : 45**

L-T-P : 3-0-0 | **Contact Hours/week : 03**

IA Max Marks : 30 | **SEE Max Marks : 70**

Prerequisite: Data Structures and Algorithms, Discrete mathematics and Graph theory | **Course Type : DE**

COURSE OBJECTIVES

1. To understand the concept of designing an algorithm.
2. To understand the concept of designing an algorithm.
3. To learn mathematical background for analysis of algorithm
4. To learn dynamic programming and approximation method.

Module	COURSE CONTENTS	HOURS ALLOTTED
1	Analysis Techniques: Empirical, mathematical, Asymptotic analysis and related unconditional and conditional notations Analysis of Algorithms: Analyzing control structures: sequencing, “For” loops, Recursive calls, “While” and “repeat” loops, using a barometer, Amortized analysis	**[10 Hours]**
2	Solving Recurrences: Intelligent guesswork, Homogeneous recurrences, Inhomogeneous Recurrences, Change of variable, Range transformations, Master Theorem, Recurrence Tree	**[09 Hours]**
3	Data Structures: Heaps, Binomial heaps, Disjoint set structures	**[08 Hours]**
4	Dynamic Programming: Making Change, The principle of optimality, The Knapsack Problem, Shortest path, Chained matrix multiplication, Approaches using recursion, Memory functions Branch and Bound, Backtracking: Design of some classical problems using branch and bound and Backtracking approaches	**[09 Hours]**
5	Np-Completeness Concepts Polynomial time verification, NP-completeness and reducibility, showing problems to be NPcomplete like Clique problem, vertex cover problem etc Approximate Algorithms: Approximate algorithms for vertex cover problem, traveling sales person problem	**[09 Hours]**

Textbooks

1. Algorithm Design, Kleinberg, J. and Tardos, E., (2014), Pearson Education
2. Introduction to Algorithms, Cormen, T. H., Leiserson, C. E., Rivest, R. L. and Stein, C., (2009), MIT Press

Reference Books

1. Fundamentals of algorithms**,** Horowitz, Sahini **,** University Press

COURSE OUTCOMES (COs)

On completion of the course, students are able to :

18CSDE663.1	Understand the complexity of analyzing the algorithm recursive and non-recursive algorithms.
18CSDE663.2	Select the appropriate order of growth complexity of recursive and non-recursive algorithms.
18CSDE663.3	Describe various data structure and structures.
18CSDE663.4	Use the concepts of dynamic programming to study the problem.
18CSDE663.5	Apply different technique to obtain optimal solution for real world problems.
18CSDE663.6	Examine the usage of algorithmic foundations to solve NP problems

Semester End Examination (SEE) Question paper pattern:

1. Eight questions are to be set covering entire syllabus. **(student shall answer 5 full question)**
   Q1 and Q2 are compulsory from UNIT 1 and UNIT 2 respectively.
   Q3 and Q4 from UNIT 3, Q5 and Q6 from UNIT 4, Q7 and Q8 from UNIT 5.
2. There shall be a maximum of three sub divisions under each question. Numerical problems shall be set wherever possible
3. Each question will carry **14 marks.**

18CSDE664 - INTERNET OF THINGS

Total Credits : 3 | **Total Contact Hours : 45**

L-T-P : 3-0-0 | **Contact Hours/week : 03**

IA Max Marks : 30 | **SEE Max Marks : 70**

Prerequisite: Microcontroller and Embedded systems, Advanced Computer Networks, Programming in JAVA | **Course Type : DE**

COURSE OBJECTIVES

1. To Assess the genesis and impact of IoT applications, architectures in real world.
2. To Illustrate diverse methods of deploying smart objects and connect them to network.
3. To Compare different Application protocols for IoT.
4. To Infer the role of Data Analytics and Security in IoT.

Module	COURSE CONTENTS	HOURS ALLOTTED
1	**Introduction and smart object** What is IoT, Genesis of IoT, IoT and Digitization, IoT Impact, Convergence of IT and IoT, IoT Challenges, IoT Network Architecture and Design, Drivers Behind NewNetwork Architectures, Comparing IoT Architectures, A Simplified IoT Architecture. Smart Objects: The Core IoT Functional Stack, IoT Data Management and Compute Stack,Smart Objects: The "Things" in IoT, Sensors, Actuators, and Smart Objects, Sensor	**[09 Hours]**
2	**IP as the IoT Network Layer** Networks, Connecting Smart Objects, Communications Criteria, IoT Access Technologies. IP as the IoT Network Layer, The Business Case for IP, The need for Optimization, Optimizing IP for IoT, Profiles and Compliances, Application Protocols for IoT, The Transport Layer, IoT Application Transport Methods.	**[08 Hours]**
3	**Data and Analytics for IoT and Challenges of IOT** Data and Analytics for IoT, An Introduction to Data Analytics for IoT, Machine Learning, Big Data Analytics Tools and Technology, Edge Streaming Analytics, Network Analytics, Securing IoT, A Brief History of OT Security, Common Challenges in IOT Security, How IT and IOT Security Practices and Systems Vary, Formal Risk	**[10 Hours]**

	Analysis Structures: OCTAVE and FAIR, The Phased Application of Security in an Operational Environment	
4	**IoT Physical Devices and Endpoints** IoT Physical Devices and Endpoints - Arduino UNO: Introduction to Arduino, Arduino UNO, Installing the Software, Fundamentals of Arduino Programming. IoT Physical Devices and Endpoints - RaspberryPi: Introduction to RaspberryPi, About the RaspberryPi Board: Hardware Layout, Operating Systems on RaspberryPi, Configuring	**[08 Hours]**
5	**RaspberryPi Programming using Python and smart cities** RaspberryPi, Programming RaspberryPi with Python, Wireless Temperature Monitoring System Using Pi, DS18B20 Temperature Sensor, Connecting Raspberry Pi via SSH, Accessing Temperature from DS18B20 sensors, Remote access to RaspberryPi. Smart and Connected Cities, An IoT Strategy for Smarter Cities, Smart City IoT Architecture, Smart City Security Architecture, Smart City Use-Case Examples.	**[10 Hours]**

Textbooks

1. Fundamentals: Networking Technologies, Protocols, and Use Cases for the Internet of Things", David Hanes, Gonzalo Salgueiro, Patrick Grossetete, Robert Barton, Jerome Henry, 1stEdition, Pearson Education (Cisco Press Indian Reprint). (ISBN: 978-9386873743)
2. "Internet of Things" Srinivasa K G, 2017, CENGAGE Leaning India

Reference Books

1. **"Internet of Things (A Hands-on-Approach)",** Vijay Madisetti and ArshdeepBahga, 1stEdition, VPT, 2014. (**ISBN:** 978-8173719547)
2. **"Internet of Things: Architecture and Design Principles",** Raj Kamal, 1st Edition, McGraw Hill Education, 2017. (**ISBN:** 978-9352605224)

COURSE OUTCOMES (COs)

On completion of the course, students are able to :

18CSDE664.1	Interpret the impact and challenges posed by IoT networks leading to new architectural models.(L3)
18CSDE664.2	Compare and contrast the deployment of smart objects and the technologies to connect them to network.(L4)
18CSDE664.3	Appraise the role of IoT protocols for efficient network communication.(L5)
18CSDE664.4	Examine the need for Data Analytics and Security in IoT.(L4)

18CSDE664.5	Illustrate different sensor technologies for sensing real world entities (L3)
18CSDE664.6	Develop the applications of IoT in Industry.(L6)

Semester End Examination (SEE) Question paper pattern:

1. Eight questions are to be set covering entire syllabus. **(student shall answer 5 full question)**
   Q1 and Q2 are compulsory from UNIT 1 and UNIT 2 respectively.
   Q3 and Q4 from UNIT 3, Q5 and Q6 from UNIT 4, Q7 and Q8 from UNIT 5.
2. There shall be a maximum of three sub divisions under each question. Numerical problems shall be set wherever possible
3. Each question will carry **14 marks.**

Semester-VII

18CSDE711 - PATTERN RECOGNITION

ELECTIVE GROUP : 1 **CREDITS: 03**
SEMESTER : 07 **L:T:P – 3:0:0**
IA/UE : 30/70 **CONTACT HRS/WEEK : 03**

Course Objective:

1.	To enables basic, as well as advanced techniques of pattern classification and analysis that are used in machine interpretation.
2.	To understand the basic building block human-machine interaction.

Module	COURSE CONTENTS	HOURS ALLOTTED
1	Introduction: Basics of pattern recognition, Design principles of pattern recognition system, Learning and adaptation, Pattern recognition approaches, Mathematical foundations – Linear algebra, Probability Theory, Expectation, mean and covariance, Normal distribution, multivariate normal densities, Chi squared test	**[9 HOURS]**
2	Statistical Patten Recognition: Bayesian Decision Theory, Classifiers, Normal density and discriminant functions,	**[9 HOURS]**
3	Parameter estimation methods: Maximum-Likelihood estimation, Bayesian Parameter estimation, Dimension reduction methods - Principal Component Analysis (PCA), Fisher Linear discriminant analysis, Expectation-maximization (EM), Hidden Markov Models (HMM), Gaussian mixture models.	**[9 HOURS]**
4	Nonparametric Techniques: Density Estimation, Parzen Windows, K-Nearest Neighbor Estimation, Nearest Neighbor Rule, Fuzzy classification	**[9 HOURS]**
5	Unsupervised Learning & Clustering: Criterion functions for clustering, Clustering Techniques: Iterative square - error partitional clustering – K means, agglomerative hierarchical clustering, Cluster validation.	**[9 HOURS]**

TEXT BOOKS/ REFERENCES

1. **"Pattern Classification",** Richard O. Duda, Peter E. Hart And David G. Stork, 2nd Edition, John Wiley, 2006.
2. **"Pattern Recognition And Machine Learning", C. M. Bishop**, Springer, 2009.
3. "**Pattern Recognition", S. Theodoridis and K. Koutroumbas, 4th Edition**, Academic Press, 2009.
4. Pattern Recognition, Narasimha Murty, Universities Press.
5. Pattern Recognition And Image Analysis,Gose, Johnsonbaugh & Jost, PHI Learning.
6. Pattern Recognition: Techniques And Applications,Shinghal, Oxford University Press.

COURSE OUTCOMES (COs)

On completion of the course, students are able to :

CO1	Memorize the basic concepts of pattern recognition
CO2	Discuss the use of statistical pattern recognition methods.
CO3	Illustrate the application of syntactic parameter methods
CO4	Use ensemble of classifiers in pattern recognition
CO5	Employ clustering for pattern recognition
CO6	Operate different pattern recognition technique on known practical applications

Semester End Examination (SEE) Question paper pattern:

1. Eight questions are to be set covering entire syllabus. **(student shall answer 5 full question)**

   Q1 and Q2 are compulsory from UNIT 1 and UNIT 2 respectively.

   Q3 and Q4 from UNIT 3, Q5 and Q6 from UNIT 4, Q7 and Q8 from UNIT 5.
2. There shall be a maximum of three sub divisions under each question. Numerical problems shall be set wherever possible
3. Each question will carry **14 marks.**

18CSDE712 - HIGH PERFORMANCE NETWORKS

ELECTIVE GROUP : 1 **CREDITS: 03**
SEMESTER : 07 **L:T:P – 3:0:0**
IA/UE : 30/70 **CONTACT HRS/WEEK : 03**

Course Objective:

1.	To introduce the new developments in modern networking systems, multimedia communications and high speed networks
2.	understanding of LAN technologies which have lead to high speed LANs
3.	to understand ATM technology and introduce high speed switching concepts
4.	to consider Quality of Service and congestion control issues
5.	To understand concept of storage architecture and management

Module	**COURSE CONTENTS**	**HOURS ALLOTTED**
1	Network Performance analysis : Objectives and requirements for Quality of Service (QoS) in high performance networks. Architecture of high Performance networks (HPN)- design issues- protocol for HPN VHF backbone networks virtual interface architectures- virtual Interface for networking- High speed Switching and routing- internet and PSTN IP switching techniques- SRP protocols- SRP authentication and key exchange comparison of TCP/IP, FTP,TELNET, queuing systems, network modeling as a graph	**[9 HOURS]**
2	Gigabit Ethernet : Architecture- standards- interface- applications- network design Frame relay: Frame relay protocols and services- frame relay congestion Control ATM: Architecture- protocol- switching- traffic and congestion control- flow control ATM service categories- ATM in LAN environment- classical IP over ATM	**[9 HOURS]**
3	ADSL and DSL Technologies: Background and technological capabilit ies- Standards and associations Architecture. Fiber Optics Communication: GPON (Gigabit capable Passive Optical Network) Introduction to MPLS and QOS Network Components of MPLS, working RSVP protocol MPLS network Components MPLS basic working Applications, IETF approach, RSVP protocol, Integrated & differential Services Framework. NET/SDH and comparison with other available standards.	**[9 HOURS]**
4	Storage and networking concepts SCSI bus architecture Networking in front of the server Networking behind the server Network Attached Storage Fibre channel internals Layers Data encoding Framing Protocol class of service flow control Name and addressing conventions.	**[9 HOURS]**

5	SAN topologies Point-Point Arbitrated Loop–Loop Addressing Loop Initialization Port Login-Loop port state machine Design considerations for Arbitrated Loop Fabrics–Fabric login Simple Name Server State Change Notification Private Loop Support Fabric Zoning Building Extended SANs. Fibre Channel Products Gigabit Interface Converters (GBICs) host Bus Adapters Fibre channel RAID Fibre channel JBODs Arbitrat ed Loop Hubs hub Architecture Unmanaged Hubs Managed Hubs Switching Hubs Fabric Switches Fibre Channel to SCSI Bridges SAN software Products Problem isolation in SANs Isola tion Techniques Fibre channel Analyzers.	**[9 HOURS]**

TEXT BOOKS

1. "Storage Area Networks Fundamentals", Alex Goldman, Cisco Press 2002
2. **Storage Area Network Essentials: a Complete Guide to understanding and implementing SANs- Richard Barker and Paul Massiglia, John Wiley India**

REFERENCES

1. **Storage Networks Explained – Uif Troppens**, Raiver Erkens and Wolfgang Muller, John Wiley & Sons, 2003.
2. Telecommunication Network Protocol Modeling And Analysis, M Shwartz:: Addison Wesley
3. Data Networks, Gallangar Prentice Hall
4. "Designing Storage Area Networks", Tom Clark, Addison-Wesley Professional, 1stedition, 1999
5. Storage Networks: The Complete Reference – Robert Sparding, Tata Mcgraw Hills, 2003.

COURSE OUTCOMES (COs)

On completion of the course, students are able to :

CO1	Describe and interpret the basics of high speed networking technologies.
CO2	Compare the various parameters of networking.
CO3	Explain algorithm and technologies involved in internet and associated networks.
CO4	select the ATM over other available transfer modes in network designs
CO5	Apply the exhibit the concept of storage architecture
CO6	Demonstrate the knowledge of network planning and optimization

Semester End Examination (SEE) Question paper pattern:

1. Eight questions are to be set covering entire syllabus. **(student shall answer 5 full question)**

   Q1 and Q2 are compulsory from UNIT 1 and UNIT 2 respectively.

   Q3 and Q4 from UNIT 3, Q5 and Q6 from UNIT 4, Q7 and Q8 from UNIT 5.
2. There shall be a maximum of three sub divisions under each question. Numerical problems shall be set wherever possible
3. Each question will carry **14 marks.**

18CSDE713 - DATA WAREHOUSING AND MINING

ELECTIVE GROUP : 1 **CREDITS: 03**
SEMESTER : 07 **L:T:P – 3:0:0**
IA/UE : 30/70 **CONTACT HRS/WEEK : 03**

Course Objective:

1.	To Define multi-dimensional datamodels.
2.	To understand rules related to association, classification and clustering analysis.
3.	To Compare and contrast between different classification and clustering algorithms

Module	COURSE CONTENTS	HOURS ALLOTTED
1	**Data Warehousing & modeling** The need for an Operational Data Store(ODS), Operational Data Store, Data warehouse, Data Marts , Comparative study of data warehouse with OLTP and ODS, Introduction data warehouse schema, Star Schema, Snowflake schema, Fact constellation schema, Introduction to Online Analytical Processing, Representation of Multi-dimensional Data, Implementing Multi-dimensional view of data in Oracle, Improving efficiency of OLAP by pre-computing the queries. Types of OLAP Servers, OLAP operations.	**[10 HOURS]**
2	**Data mining Introduction** Introduction to data mining, Need of data mining, What Can Data Mining Do and Not Do?, Data Mining Applications, Data Mining Process (KDD), Data Mining Techniques, Difference between Data Mining and Machine Learning **Association Analysis:** Problem Definition, Frequent Item set Generation, Rule generation. Alternative Methods for Generating Frequent Item sets, FP-Growth Algorithm. Implementation of Association data mining algorithms	**[9 HOURS]**
3	**Classification** Introduction to Classification, Types of Classification, Input and Output Attributes, Working of Classification, Introduction to the Decision Tree Classifier, Rule based classifier, Naïve Bayes Method, Understanding Metrics to Assess the Quality of Classifiers. Implementation of Classification techniques.	**[10 HOURS]**
4	**Clustering Analysis** Introduction to clustering, Applications of Cluster Analysis, Desired Features of Clustering, Distance Metrics, Major Clustering Methods/Algorithms, Partitioning Clustering: k-means clustering, Hierarchical Clustering Algorithms (HCA): Agglomerative clustering, Divisive clustering, Density-based clustering, DBSCAN algorithm. Implementation of Clustering methods.	**[8 HOURS]**

5	**Web mining and Search Engines** Introduction, Web Content Mining, Web Usage Mining, Web Structure Mining, Introduction to Web Search Engine, Working of search engine, Page Rank Algorithm, Precision and Recall. Data Mining Trends and Research Frontiers : Mining Complex Data Types, Data Mining Applications, Data Mining and Society, Data Mining Trends	**[10 HOURS]**

TEXT BOOKS

1. **Data Mining and Data Warehousing: Principles and Practical Techniques, by Parteek Bhatia, 2019**, Cambridge
2. **Introduction to DataMining, Panging Tan, Michael Steinbach, VipinKumar, First impression,2014., Pearson**
3. **DataMining-Concepts and Techniques, Jiawei Han, Micheline Kamber, Jian Pei, 3rd Edition, 2012., Morgan Kaufmann Publisher**

REFERENCES

1. Data Warehousing in the Real World, Sam Anahory, Dennis Murray, Tenth Impression, , 2012. Pearson
2. Mastering Data Mining, Michael.J.Berry, Gordon.S.Linoff, Second edtion,2012, Wiley Edition,

COURSE OUTCOMES (COs)

On completion of the course, students are able to :

CO1	Summarize the functionality of the various Data warehouse models
CO2	Illustrate the working of different Association techniques.
CO3	Compare the different classification algorithms to solve problems.
CO4	Demonstrate the working of different clustering algorithms
CO5	Demonstrate the categories of Web Mining
CO6	Examine the applications of data mining techniques through case study.

Semester End Examination (SEE) Question paper pattern:

1. Eight questions are to be set covering entire syllabus. **(student shall answer 5 full question)**

   Q1 and Q2 are compulsory from UNIT 1 and UNIT 2 respectively.

   Q3 and Q4 from UNIT 3, Q5 and Q6 from UNIT 4, Q7 and Q8 from UNIT 5.
2. There shall be a maximum of three sub divisions under each question. Numerical problems shall be set wherever possible
3. Each question will carry **14 marks.**

18CSDE714 AGILE-PRINCIPLES-PATTERNS-AND PRACTICES

ELECTIVE GROUP: 2 **CREDITS: 03**
SEMESTER : 07 **L:T:P – 3:0:0**
IA/UE: 30/70 **CONTACT HRS/WEEK : 03**

Course Objective:

1.	To provide students with a theoretical as well as practical understanding of agile software development practices and how small teams can apply them to create high-quality software.
2.	To provide a good understanding of software design and a set of software technologies and APIs.
3.	To do a detailed examination and demonstration of Agile development and testing techniques.
4.	To understand the benefits and pitfalls of working in an Agile team.
5.	To understand Agile development and testing.

Module	COURSE CONTENTS	HOURS ALLOTTED
1	**AGILE METHODOLOGY** Theories for Agile Management – Agile Software Development – Traditional Model vs. Agile Model – Classification of Agile Methods – Agile Manifesto and Principles – Agile Project Management – Agile Team Interactions – Ethics in Agile Teams – Agility in Design, Testing – Agile Documentations – Agile Drivers, Capabilities and Values	**[9HOURS]**
2	**AGILE PROCESSES** Lean Production – SCRUM, Crystal, Feature Driven Development-Adaptive Software Development – Extreme Programming: Method Overview – Lifecycle – Work Products, Roles and Practices	**[9 HOURS]**
3	**AGILITY AND KNOWLEDGE MANAGEMENT** Agile Information Systems – Agile Decision Making – Earl_S Schools of KM – Institutional Knowledge Evolution Cycle – Development, Acquisition, Refinement, Distribution, Deployment , Leveraging – KM in Software Engineering – Managing Software Knowledge – Challenges of Migrating to Agile Methodologies – Agile Knowledge Sharing – Role of Story-Cards – Story-Card Maturity Model (SMM).	**[9 HOURS]**
4	**AGILITY AND REQUIREMENTS ENGINEERING** Impact of Agile Processes in RE–Current Agile Practices – Variance – Overview of RE Using Agile – Managing Unstable Requirements – Requirements Elicitation – Agile Requirements Abstraction Model – Requirements Management in Agile Environment, Agile Requirements Prioritization – Agile Requirements Modeling and	**[9 HOURS]**

	Generation – Concurrency in Agile Requirements Generation	
5	**AGILITY AND QUALITY ASSURANCE** Agile Product Development – Agile Metrics – Feature Driven Development (FDD) – Financial and Production Metrics in FDD – Agile Approach to Quality Assurance – Test Driven Development – Agile Approach in Global Software Development	**[9 HOURS]**

TEXT BOOKS:

1. **Agile Management for Software Engineering: Applying the Theory of Constraints for Business Results - David J. Anderson and Eli Schragenheim**, —, Prentice Hall, 2003.
2. **Agile Software Engineering, Hazza and Dubinsky, — Series: Undergraduate Topics in Computer Science, Springer, 2009**.

REFERENCES:

1. **Agile and Iterative Development: A Managers Guide, Craig Larman**, —, Addison-Wesley, 2004.
2. Agile Information Systems: Conceptualization, Construction, and Management, Butterworth- Heinemann Kevin C. Desouza**, —, 2007.**

COURSE OUTCOMES (COs)

On completion of the course, students are able to :

CO1	Realize the importance of interacting with business stakeholders in determining the requirements for a software system
CO2	Illustrate the iterative software development processes: how to plan them, how to execute them.
CO3	Interpret the impact of social aspects on software development success.
CO4	Develop techniques and tools for improving team collaboration and software quality.
CO5	outline Software process improvement as an ongoing task for development teams.
CO6	Show how agile approaches can be scaled up to the enterprise level.

Semester End Examination (SEE) Question paper pattern:

1. Eight questions are to be set covering entire syllabus. **(student shall answer 5 full question)**

   Q1 and Q2 are compulsory from UNIT 1 and UNIT 2 respectively.

   Q3 and Q4 from UNIT 3, Q5 and Q6 from UNIT 4, Q7 and Q8 from UNIT 5.
2. There shall be a maximum of three sub divisions under each question. Numerical problems shall be set wherever possible
3. Each question will carry **14 marks.**

18CSDE721 - ARTIFICIAL INTELLIGENCE

ELECTIVE GROUP : 2 **CREDITS: 03**
SEMESTER : 07 **L:T:P – 3:0:0**
IA/UE : 30/70 **CONTACT HRS/WEEK : 03**

Course Objective:

1.	Study the concepts of Artificial Intelligence and intelligent system.
2.	Learn the methods of solving problems using Artificial Intelligence.

Module	COURSE CONTENTS	HOURS ALLOTTED
1	INTRODUCTION Introduction–Definition - Future of Artificial Intelligence – Characteristics of Intelligent Agents– Typical Intelligent Agents – Problem Solving Approach to Typical AI problems.	**[9 HOURS]**
2	INTELLIGENT AGENTS AND KNOWLEDGE REPRESENTATION Agents and Environments – Good Behavior: The concepts of Rationality – The Nature of Environments – The Structure of Agents – Knowledge Representation – Object Oriented Approach – Semantic Nets – Frames – Semantic Web – Ontology.	**[9 HOURS]**
3	SEARCH TECHNIQUES Problem Solving by Search – Uninformed Search – Searching with Costs – Informed State Space Search – Heuristic Search: – Problem Reduction Search – Game Search – Constraint Satisfaction Problems.	**[9 HOURS]**
4	ARTIFICIAL INTELLIGENCE PLANNING Classical Planning – Partial Order Planning – Graph Plan and SAT Plan – Hierarchical Planning – Planning and Acting in Nondeterministic Domains – Multiagent Planning.	**[9 HOURS]**
5	LISP AND PROLOG : CASE STUDIES Study of LISP and PROLOG–Study of facts, objects, predicates and variables in PROLOG–Study of Rules and Unification in PROLOG–Write a prolog program to maintain family tree–prolog for medical diagnosis–fact for the statements using PROLOG–Implement waterjug problem using LISP–Library Management System using PROLOG/LISP–8-Puzzle problem using BFS	**[9 HOURS]**

TEXT BOOKS:

1. "**Artificial Intelligence – A Modern Approach**", Stuart J. Russell, Peter Norvig, Third Edition, Pearson Education, 2015.
2. **Prolog: Programming for Artificial Intelligence, Bratko,** — Fourth edition, Addison-Wesley Educational Publishers Inc., 2011

REFERENCES:

1. **Artificial Intelligence: A Systems Approach**(Computer Science M. Tim Jones, —)||, Jones and Bartlett Publishers, Inc.; First Edition, 2008

COURSE OUTCOMES (COs)

On completion of the course, students are able to :

CO1	Understand the role of knowledge representation, problem solving, and learning in intelligent-system engineering.
CO2	Explain the basic knowledge representation, problem solving, and learning methods of Artificial Intelligence.
CO3	Understand different techniques and methodologies available for knowledge acquisition
CO4	Select a search algorithm for a problem and estimate its time and space complexities
CO5	Differentiate between different knowledge representation techniques and describe methods of knowledge acquisition and extraction
CO6	Analyze the development process of expert system through various case studies

Semester End Examination (SEE) Question paper pattern:

1. Eight questions are to be set covering entire syllabus. **(student shall answer 5 full question)**

   Q1 and Q2 are compulsory from UNIT 1 and UNIT 2 respectively.

   Q3 and Q4 from UNIT 3, Q5 and Q6 from UNIT 4, Q7 and Q8 from UNIT 5.
2. There shall be a maximum of three sub divisions under each question. Numerical problems shall be set wherever possible
3. Each question will carry **14 marks.**

18CSDE722 - VIRTUALIZATION TECHNIQUES

ELECTIVE GROUP : 2 **CREDITS: 03**
SEMESTER : 07 **L:T:P – 3:0:0**
IA/UE : 30/70 **CONTACT HRS/WEEK : 03**

Course Objective:

1.	To understand File Systems & Introduction to Virtualization
2.	To explain types of virtualizations
3.	To demonstrate Network and Memory Virtualization using open source tools
4.	To discuss some case studied and Storage virtualization &Virtualization performance and Security

Module	COURSE CONTENTS	HOURS ALLOTTED
1	**File Systems:** Memory and Storage, File systems, Distributed file systems, Map and Reduce, Hadoop File Systems, Google File System, Big table. **Introduction to Virtualization:** Physical and virtual machines, Traditional and virtual computing, Understanding virtualization, Need and Applications of virtualization, Limitations, Simulations and Emulations, Challenges in Virtualized environment, tools and technologies in virtualized environments.	**[10 HOURS]**
2	**Types of Virtualization :** Various forms of virtualization: Desktop, Application, Server, Hardware, Storage, Memory and I/O virtualization. **Server Virtualization:** Server consolidation, Privileged instructions, Binary translation, Hypervisors, Types of Hypervisors, Hypervisor architecture, Full Virtualization, Para Virtualization , Hardware Assisted Virtualization, Implementation of Hardware Assisted Virtualization, Algorithms for implementation of Virtualization, Challenges	**[10 HOURS]**
3	**Network :**IP addressing, virtual LAN, Memory addressing, Paging, Memory mapping, virtual memory, complexities and solutions of memory virtualization. **Memory Virtualization VM Management:** VM lifecycle, Process and system level VMs, VM configurations, VM migrations, Migration types and process, VM provisioning, Scaling,VM scheduling, Load balancing: Significance, Types and Algorithms	**[10 HOURS]**
4	**Storage virtualization** RAID, SCSI, iSCSI, Direct attached storage, Network Attached storage, Storage Area network **Virtualization performance and Security** Performance issues, Virtual machine sprawling, Hypervisor vulnerabilities, Hypervisor attacks, VM attacks, VM migration attacks, Security solutions.	**[10 HOURS]**
5	**Self Study** Private cloud implementation using Eucalyptus, Hyper-V and VMWare	**[5 HOURS]**

TEXT BOOKS:

1. **Virtualization: From the Desktop to the Enterprise, Chris Wolf, Erick M. Halter, 1st Edition, 2008, A Press**
2. **Systems and Virtualization Management: Standards** and New Technologies, **Boursas**, L., **Carlson**, M., **Hommel**, W., **Sibilla**, M., **Wold**, K, 2008, Springer

REFERENCES:

2. Professional Xen Virtualization, William von Hagen, 2008, Wrox Publications
3. Virtual Machines: Versatile Platforms for Systems and Processes, James E. Smith, Ravi Nair, 2005, Elsevier/Morgan Kaufmann

COURSE OUTCOMES (COs)

On completion of the course, students are able to :

CO1	Understand about Computing Virtualization tools, applications and techniques
CO2	Explore the Varity of virtualization and server virtualization
CO3	Examine various architectures for implementing virtualization methods
CO4	Appraise techniques for virtualizing and managing the hardware components of a computer system.
CO5	Apply virtualization concepts at server, client and desktop level.
CO6	Design virtualization techniques in Private Cloud

Semester End Examination (SEE) Question paper pattern:

1. Eight questions are to be set covering entire syllabus. **(student shall answer 5 full question)**

   Q1 and Q2 are compulsory from UNIT 1 and UNIT 2 respectively.

   Q3 and Q4 from UNIT 3, Q5 and Q6 from UNIT 4, Q7 and Q8 from UNIT 5.
2. There shall be a maximum of three sub divisions under each question. Numerical problems shall be set wherever possible
3. Each question will carry **14 marks.**

18CSDE723 - BIG DATA ANALYTICS

ELECTIVE GROUP : 2 CREDITS: 03
SEMESTER : 07 **L:T:P – 3:0:0**
IA/UE : 30/70 **CONTACT HRS/WEEK : 03**

Course Objective:

1.	To understand the importance of big data.
2.	To gain the knowledge of Hadoop and Map reduce process.
3.	To know the process of Hadoop Distributed File System.
4.	To apply the tools and methods for Hadoop Cluster Setup.

Module	COURSE CONTENTS	HOURS ALLOTTED
1	**INTRODUCTION TO BIG DATA** Big Data and its Importance – Four V's of Big Data – Drivers for Big Data –Introduction to Big Data Analytics– Big Data Analytics applications – BIG DATA ARCHITECTURE COMPONENTS Massively Parallel Processing (MPP) Platforms, Unstructured Data Analytics and Reporting, Big Data and Single View of Customer/Product, Data Privacy Protection, Real-Time Adaptive Analytics and Decision Engines	**[10 HOURS]**
2	**HADOOP AND MAP REDUCE,** Data Storage and Analysis - Comparison with Other Systems computing - History of Hadoop - Apache Hadoop and the Hadoop Ecosystem. Map Reduce: Analyzing the Data with Hadoop - Map and Reduce - Java MapReduce - Scaling Out- Data Flow - Combiner Functions - Running a Distributed MapReduce Job - Hadoop Streaming - Ruby – Python. HADOOP DISTRIBUTED FILESYSTEM (HDFS) Design - HDFS Concepts – Blocks, Name nodes and Data nodes, HDFS Federation, HDFS High Availability - Command-Line Interface - Basic Filesystem Operations - Hadoop File systems- Interfaces - Java Interface - Reading Data from a Hadoop URL	**[10 HOURS]**
3	**READING DATA USING THE FILE SYSTEM API** Reading Data Using the File System API, Writing Data, Directories, Querying the Filesystem, Deleting Data - Data Flow- Anatomy of a File Read, Anatomy of a File Write, Coherency Model - Parallel Copying with distcp- Keeping an HDFS Cluster Balanced - Hadoop Archives – Limitations	**[8 HOURS]**

4	**DEVELOPING MAPREDUCE APPLICATION** The Configuration API - Combining Resources , Variable Expansion - Configuring the Development Environment, Managing Configuration –Generic Options Parser, Tool, and ToolRunner - Writing a Unit Test – Mapper, Reducer - Running Locally on Test Data - Running a Job in a Local Job Runner, Testing the Driver - Running on a Cluster – Packaging, Launching a Job, MAPREDUCE WEB UI Retrieving the Results, Debugging a Job, Hadoop Logs, Remote Debugging -Tuning a Job - Profiling Tasks - MapReduce Workflows - Decomposing a Problem into MapReduce Jobs, JobControl, ApacheOozie. Hadoop Cluster Setup - Cluster Specification - Network Topology - Cluster Setup and Installation - Installing Java, Creating a Hadoop User	**[10 HOURS]**
5	**HADOOP CONFIGURATION** Installing Hadoop - Testing the Installation - SSH Configuration - Hadoop Configuration - Configuration Management, Environment Settings, Important Hadoop Daemon Properties, Hadoop Daemon Addresses and Ports, Other Hadoop Properties, User Account Creation - YARN Configuration - Important YARN Daemon Properties, YARN Daemon Addresses and Ports - Security - Kerberos and Hadoop, Delegation Tokens, Other Security Enhancements - Benchmarking a Hadoop Cluster - Hadoop Benchmarks, User Jobs -Hadoop in the Cloud - Hadoop on Amazon EC2.	**[7 HOURS]**

TEXT BOOKS:

1 **Big Data Analytics: Disruptive Technologies for Changing the Game, ArvindSathi, 1st Edition, 2012, IBM Corporation** Hadoop:TheDefinitive Guide, TomWhite, 3rd Edition, 2012, O'Reilley

REFERENCES:

1 Hadoop Operations, Eric Sammer, 1st Edition, 2012, O'Reilley

Bigdata analytics with Rand Hadoop, Vignesh Prajapati, 2nd Edition, 2013, SPD

Programming Hive, E. Capriolo,D. Wampler, and J. Rutherglen, 1st Edition, 2012, O'Reilley

COURSE OUTCOMES (COs)

On completion of the course, students are able to :

CO1	Understand the concepts of big data.
CO2	Analyze the concepts of Hadoop and Map reduce process.
CO3	Implement the Hadoop Distributed File System.

CO4	Develop a Map reduce Application.
CO5	Apply tools and techniques for Hadoop Cluster Setup.
CO6	Summarize the Hadoop Properties in Cloud setup.

Semester End Examination (SEE) Question paper pattern:

1. Eight questions are to be set covering entire syllabus. **(student shall answer 5 full question)**
   Q1 and Q2 are compulsory from UNIT 1 and UNIT 2 respectively.
   Q3 and Q4 from UNIT 3, Q5 and Q6 from UNIT 4, Q7 and Q8 from UNIT 5.
2. There shall be a maximum of three sub divisions under each question. Numerical problems shall be set wherever possible
3. Each question will carry **14 marks.**

18CSDE724 SOFTWARE PROJECT MANAGEMENT

ELECTIVE GROUP : 1 **CREDITS: 03**
SEMESTER : 07 **L:T:P – 3:0:0**
IA/UE : 30/70 **CONTACT HRS/WEEK : 03**

Course Objective:

1.	to develop understanding of the issues involved in managing Information Systems projects.
2.	To impart practical knowledge of the skills and techniques used to manage information systems projects.
3.	To provide the insight of skills required to implement information systems. Management of time, scope and cost are vital, as are the "soft" skills of managing the team and communicating with the stakeholders.

Module	COURSE CONTENTS	HOURS ALLOTTED
1	Introduction to Software Project Management: Introduction to Project and Project Management, Reasons for IT project failure, Triple constraint of IT project management, Management spectrum of project, Overview of project life cycle models, Project manager skills and job description conceptualization and initiation of IT project, Business case. Project Charter : Introduction, Project management process and their correlation with project life cycle phases, Introduction to Project Integration management and seven processes, Project Charter. Project Scope Management: Introduction, Processes of scope management	[9 HOURS]
2	**Project Scope Management:** Introduction, Processes of scope management. **Project Human Resource Management:** Introduction, Organizational structure – Function, Project and Matrix, Keys to managing people motivation theories and improving effectiveness, Project team selection. **Project Time and Cost Management :** Introduction, Development of project schedule, CPM and PERT, Activities their sequencing and dependencies, Project network diagrams, Development of Gantt Charts, Earned Value Management, Introduction to Constructive Cost Model (COCOMO).	[9 HOURS]
3	**Project Risk Management :** Introduction, Risk Management Process, Risk Identification for IT projects, Qualitative and Quantitative approaches to Risk Analysis, Risk Strategies, Risk Monitoring and Control, Risk Response and Evaluation Project Quality Management.	[9 HOURS]
4	**Project Communication Management:** Introduction, Project Communication Plan, Project metrics, Information distribution, Performance Reporting.	[9 HOURS]

	Project Change Management: Introduction, Impact of change, Change as a process, Change Management plan, Dealing with resistance and conflict, Configuration management. **Project Procurement Management:** Introduction, Processes Planning Purchases and Acquisition, Contracting, Request Seller Responses, Select Sellers, Contract Administration, Contract Closure, Outsourcing of products and services.	
5	**Project Leadership and Ethics:** Introduction, Project Leadership, Modern approaches, Styles of leadership, Ethical leadership, Making sound ethical decisions in the situations of conflict. **Closure of a Project:** Introduction, Project implementation, Administrative closure, Project Evaluation.	[9 HOURS]

TEXT BOOKS

1 **"Information Technology Project Management", Jack T Marchewka, (International Student Version), Wiley India.**
2 "Software Project Management", Bob Hughes, Mike Cotterell, Rajib Mall, , Mc GrawHill.

REFERENCES

1 Project Management in IT , Kathy Schwalbe, , India Edition, Cengage Learning.
Software Project Management in Practice, Pankaj Jalote, Pearson, Education Asia.

COURSE OUTCOMES (COs)

On completion of the course, students are able to :

CO1	Understand the basic concepts and issues of software project management
CO2	Create effective plan for real world software project and implement the project plans with available resources
CO3	Employ mechanisms for tracking the software projects
CO4	Exhibit the knowledge in change, procure and communication management in projects
CO5	Identify various activities required to complete software projects
CO6	Conduct the activities necessary to successfully complete and close the software projects

Semester End Examination (SEE) Question paper pattern:

1. Eight questions are to be set covering entire syllabus. **(student shall answer 5 full question)**

   Q1 and Q2 are compulsory from UNIT 1 and UNIT 2 respectively.

   Q3 and Q4 from UNIT 3, Q5 and Q6 from UNIT 4, Q7 and Q8 from UNIT 5.
2. There shall be a maximum of three sub divisions under each question. Numerical problems shall be set wherever possible
3. Each question will carry **14 marks.**

18CSDE731 - ARTIFICIAL NEURAL NETWORKS

ELECTIVE GROUP : 3 **CREDITS: 03**
SEMESTER : 07 **L:T:P – 3:0:0**
IA/UE : 30/70 **CONTACT HRS/WEEK : 03**

Course Objective:

1.	To introduce the fundamental techniques and principles of Neural Networks
2.	To study the different models in ANN and their applications
3.	To familiarize deep learning concepts with Convolutional Neural Network case studies

Module	COURSE CONTENTS	HOURS ALLOTTED
1	INTRODUCTION TO ARTIFICIAL NEURAL NETWORKS Fundamentals Of Neural Networks – Model of Artificial Neuron – Neural Network Architectures – Learning Methods – Taxonomy Of Neural Network Architectures – Applications	**[9 HOURS]**
2	FEED FORWARD NEURAL NETWORKS Perceptron Models: Discrete, Continuous and Multi-Category – Training Algorithms: Discrete and Continuous Perceptron Networks – Limitations of the Perceptron – Model. Credit Assignment Problem – Generalized Delta Rule, Derivation of Back propagation (BP) Training, and Summary of Back propagation Algorithm – Kolmogorov Theorem	**[9 HOURS]**
3	ANN ARCHITECTURES Associative Memory – Exponential BAM – Associative Memory For Real Coded Pattern Pairs – Applications Adaptive Resonance Theory – Introduction – ART 1 – ART2 – Applications – Neural Networks Based On Competition – Kohenen Self Organizing Maps – Learning Vector Quantization – Counter Propagation Networks – Industrial Applications	**[9 HOURS]**
4	DEEP LEARNING Deep Feed Forward network, regularizations, training deep models, dropouts, Training Deep Neural Networks using Back Propagation-Setup and initialization issues, vanishing and exploding Gradient problems, Gradient- Descent Strategies	**[9 HOURS]**
5	CONVOLUTIONAL NEURAL NETWORK Convolutional Neural Network, Basic structure of Convolutional Network, Case studies: Alex net, VGGNet, GoogLeNet, Applications of CNN– Object Detection, Content based image Retrieval	**[9 HOURS]**

TEXT BOOKS:

1. **"Neural Networks and Deep learning", CharuC.Aggarwal** Springer International Publishing, 2018

2. "Neural Networks, A Classroom Approach", Satish Kumar, Tata McGraw -Hill, 2007
3. "**Neural Networks, A Comprehensive Foundation", Simon Haykin**, 2nd Edition, Addison Wesley Longman, 2001.

REFERENCE BOOKS

1. **Pattern Recognition and Machine Learning,** Bishop, Christopher M.. Springer, 2006
2. **Pattern Classification Duda, Richard**, Peter Hart, and David Stork.. 2nd ed. New York, NY: Wiley-Interscience, 2000.

COURSE OUTCOMES (COs)

On completion of the course, students are able to :

CO1	To remember the basic fundamentals of Deep Learning Techniques and need for ANN
CO2	To understand different types of networks and classification of single and multi-layer feed-forward neural networks
CO3	To differentiate and understand linear and nonlinear models, and training of neural networks using various learning rules
CO4	To apply neural networks to classification and recognition problems, and other societal problems using tools
CO5	To analyze the performance of learning algorithms for multilayer perceptrons, radial-basis function networks, and Kohonen self-organising maps using tools
CO6	To evaluate the outcome and effect of different learning algorithms for various types of networks for real – life problems using tools

Semester End Examination (SEE) Question paper pattern:

1. Eight questions are to be set covering entire syllabus. **(student shall answer 5 full question)**

   Q1 and Q2 are compulsory from UNIT 1 and UNIT 2 respectively.

   Q3 and Q4 from UNIT 3, Q5 and Q6 from UNIT 4, Q7 and Q8 from UNIT 5.
2. There shall be a maximum of three sub divisions under each question. Numerical problems shall be set wherever possible
3. Each question will carry **14 marks.**

18CSDE732 - STORAGE AREA NETWORKS

ELECTIVE GROUP : 3 **CREDITS: 03**
SEMESTER : 07 **L:T:P – 3:0:0**
IA/UE : 30/70 **CONTACT HRS/WEEK : 03**

Course Objective:

1.	Understand Storage Area Networks characteristics, components and describe the challenges associated with data center networking and the need for switch network convergence
2.	Learn Fibre Channel protocols and how SAN components use them to communicate with each other.
3.	Understand the different networked storage options for different application environments and describe the business continuity and disaster recovery in a storage infrastructure.
4.	Describe different type process and file-level virtualization technologies.

Module	COURSE CONTENTS	HOURS ALLOTTED
1	**Storage System** Introduction to evolution of storage architecture, key data center elements, virtualization, and cloud computing. Key data center elements – Host (or compute), connectivity, storage, and application in both classic and virtual environments. RAID implementations, techniques, and levels along with the impact of RAID on application performance. Components of intelligent storage systems and virtual storage provisioning and intelligent storage system implementations	**[9 HOURS]**
2	**Storage Networking Technologies and Virtualization** Fibre Channel SAN components, connectivity options, and topologies including access protection mechanism 'zoning", FC protocol stack, addressing and operations, SAN-based virtualization and VSAN technology, iSCSI and FCIP protocols for storage access over IP network, Converged protocol FCoE and its components, Network Attached Storage (NAS) - components, protocol and operations, File level storage virtualization, Object based storage and unified storage platform.	**[9 HOURS]**
3	**Backup, Archive, and Replication** Information availability and business continuity solutions in both virtualized and non-virtualized environments. Business continuity terminologies, planning and solutions, Clustering and multipathing architecture to avoid single points of failure, Backup and recovery - methods, targets and topologies, Data deduplication and backup in virtualized environment, Fixed content and data archive, Local replication in classic and virtual environments, Remote replication	**[9 HOURS]**

	in classic and virtual environments, Three-site remote replication and continuous data protection	
4	**Cloud Computing Characteristics and benefits** Business drivers, definition, essential characteristics, and phases of journey to the Cloud. ,Business drivers for Cloud computing, Definition of Cloud computing, Characteristics of Cloud computing, Steps involved in transitioning from Classic data center to Cloud computing environment Services and deployment models, Cloud infrastructure components, Cloud migration considerations	**[9 HOURS]**
5	**Securing and Managing Storage Infrastructure** Framework and domains of storage security along with covering security. implementation at storage networking. Security threats, and countermeasures in various domains Security solutions for FC-SAN, IP-SAN and NAS environments, Security in virtualized and cloud environments, Monitoring and managing various information infrastructure components in classic and virtual environments, Information lifecycle management (ILM) and storage tiering, Cloud service management activities	**[9 HOURS]**

TEXT BOOKS:

1. **Information Storage and Management , Somasundaram, Gnanasundaram Alok Shrivastava :EMC Education Services, Publisher: Wiley**

Storage Virtualization, Clark Tom, Publisher: Addison Wesley

COURSE OUTCOMES (COs)

On completion of the course, students are able to :

CO1	Identify key challenges in managing information and analyze different storage networking technologies and virtualization
CO2	Explain components and the implementation of NAS
CO3	Describe CAS architecture and types of archives and forms of virtualization
CO4	Differentiate between local and remote replication technologies
CO5	Understand the concept of backup and recovery operations
CO6	Illustrate the storage infrastructure and management activities

Semester End Examination (SEE) Question paper pattern:

1. Eight questions are to be set covering entire syllabus. **(student shall answer 5 full question)**

   Q1 and Q2 are compulsory from UNIT 1 and UNIT 2 respectively.

   Q3 and Q4 from UNIT 3, Q5 and Q6 from UNIT 4, Q7 and Q8 from UNIT 5.
2. There shall be a maximum of three sub divisions under each question. Numerical problems shall be set wherever possible
3. Each question will carry **14 marks.**

18CSDE733 - WEB SEMANTICS

ELECTIVE GROUP : 3 CREDITS: 03
SEMESTER : 07 **L:T:P – 3:0:0**
IA/UE : 30/70 **CONTACT HRS/WEEK : 03**

Course Objective:

1.	understand the rationale behind Semantic Web
2.	model ontologies using Resource Description Framework
3.	model and design ontologies using Web Ontology Language
4.	Understand and reflect on the principles of Ontology Engineering.

Module	COURSE CONTENTS	HOURS ALLOTTED
1	Semantic Web Vision: Todays' web, Examples of semantic web from today's web, Semantic web technologies, layered approach Structured web documents in XML: The XML language, Structuring, Namespaces, Querying and Addressing XML documents, Processing	**[10 HOURS]**
2	Describing Web Resources:Introduction, RDF , RDF Schema syntax and language, Direct Inference System, Querying RQL	[8 HOURS]
3	Web Ontology Language:Introduction, OWL language, Examples, OWL in OWL, Future extensions, Logic and Inference: Rules: Introduction, Monotonic Rules syntax, semantics & examples, Nonmonotonic rules – syntax & examples, Encoding in XML	**[10 HOURS]**
4	Applications: Introduction, Horizontal Information Products at Elsevier, Data Integration at Audi, Skill Finding at Swiss Life, Think Tank portal at EnerSearch, e-Learning, Web Services, Other Scenarios	**[8 HOURS]**
5	Ontology Engineering: Introduction, Manual construction of Ontology, Reusing existing ontology, using Semi-automatic methods, Knowledge semantic web architecture, How it fits together?, Issues and future trends	**[9 HOURS]**

TEXT BOOKS:

1 A Semantic web Primer, Grigoris Antoniou and Frank Van Hermelen, MIT Press Foundation of Semantic Web Technologies, Pascal Hitzler, Markus Krötzsch, Sebastian Rudolph, CRC Press Semantic Web programming, John Hebler, Wiley

COURSE OUTCOMES (COs)

On completion of the course, students are able to :

CO1	Understand Semantic web
CO2	Creating structured web documents in XML
CO3	Describe web resources
CO4	Understand the usage WOL
CO5	Exhibit the knowledge ontology engineering to solve problems
CO6	Apply ontology engineering to various problems

Semester End Examination (SEE) Question paper pattern:

1. Eight questions are to be set covering entire syllabus. **(student shall answer 5 full question)**
   Q1 and Q2 are compulsory from UNIT 1 and UNIT 2 respectively.
   Q3 and Q4 from UNIT 3, Q5 and Q6 from UNIT 4, Q7 and Q8 from UNIT 5.
2. There shall be a maximum of three sub divisions under each question. Numerical problems shall be set wherever possible
3. Each question will carry **14 marks.**

18CSDE734 - SOFTWARE QUALITY ASSURANCE

ELECTIVE GROUP : 3 **CREDITS: 03**
SEMESTER : 07 **L:T:P – 3:0:0**
IA/UE : 30/70 **CONTACT HRS/WEEK : 03**

Course Objective:

1.	present effective testing techniques (both black-box and white box) for ensuring high quality software;
2.	Learn metrics for managing quality assurance and understand capabilities of test tools.

Module	COURSE CONTENTS	HOURS ALLOTTED
1	Software Quality Concepts: Software quality problems. Quality definition. Cost of quality, Quality model	**[9 HOURS]**
2	Code-based Testing Techniques: Control flow and data flow testing. Mutation testing. Symbolic evaluation. Domain testing. [T3 – CH 4, 5, 6]	**[9 HOURS]**
3	Specification-based Testing Techniques: Equivalence partitioning. Boundary value analysis. Cause- effect graphing. Random testing. State machine testing. Formal program verification. [T2 – CH 1, 4, T1-CH5]	**[9 HOURS]**
4	Inspection Technique: Process, Role, Templates [T2 – CH 22],	**[9 HOURS]**
5	Management of Software Quality: Responsibility. Test cycle (unit, integration, system, alpha and beta testing phases). Design and code reviews. Test plans. Test tools. Quality metrics. Quality prediction. In-process quality tracking.	**[9 HOURS]**

TEXT BOOKS:

1 Software Testing: A Craftsman's Approach, Jorgensen, P.C., 2013, 4th Ed, Auerbach Publications.
2 The Art of Software Testing, Myers, G.J., Sandler, C., Badgett, T., 2011, 3rd Ed, Wiley
Software Testing And Quality Assurance Theory And Practice, Kshirasagar Naik, Priyadarshi Tripathy, Wiley
3 Software Testing: Principles and Practices, Naresh Oxford University Press 2010

COURSE OUTCOMES (COs)

On completion of the course, students are able to :

CO1	Describe the definition of quality, cost of quality, quality model;
CO2	apply white-box testing, black-box testing, and inspection techniques;
CO3	Show how test tools can be used in the testing life cycle;
CO4	Use testing metrics for product and process;
CO5	Explain the performance testing and usability testing
CO6	Illustrate software development with quality plan

Semester End Examination (SEE) Question paper pattern:

1. Eight questions are to be set covering entire syllabus. **(student shall answer 5 full question)**
   Q1 and Q2 are compulsory from UNIT 1 and UNIT 2 respectively.
   Q3 and Q4 from UNIT 3, Q5 and Q6 from UNIT 4, Q7 and Q8 from UNIT 5.
2. There shall be a maximum of three sub divisions under each question. Numerical problems shall be set wherever possible
3. Each question will carry **14 marks.**

18CSDE741 - COMPUTATIONAL INTELLIGENCE

ELECTIVE GROUP : 4 **CREDITS: 03**
SEMESTER : 07 **L:T:P – 3:0:0**
IA/UE : 30/70 **CONTACT HRS/WEEK : 03**

Course Objective:

1.	Basic techniques, theory and computational models of Fuzzy and Soft computing.
2.	focuses on how to apply several neural network algorithms over real-time problems to get optimized outcome

Module	COURSE CONTENTS	HOURS ALLOTTED
1	Introduction: Introduction to CI, History of CI, Basic techniques and applications of CI, Introduction to Neural Network, Fuzzy Logic, Genetic Algorithm, Hybrid System. Elementary and Advance Search Techniques: State Space Search, Blind Search, Heuristic Search(Hill Climbing, A/A* Algorithm, Min-Max Search, Constraint Satisfaction), Multi-Objective Genetic Algorithm	**[9 HOURS]**
2	Fuzzy Set Theory: Fuzzy Sets, Basic Definition and Terminology, Set-theoretic Operations, Member Function Formulation and Parameterization, Fuzzy Rules and Fuzzy Reasoning using IF-THEN rules, Extension Principle and Fuzzy Relations, Fuzzy Inference Systems, Different Fuzzy Models: Mamdani Fuzzy Models, Sugeno Fuzzy Models, Tsukamoto Fuzzy Models, Input Space Partitioning and Fuzzy Modeling.	**[9 HOURS]**
3	Optimization: Derivative-based Optimization, Descent Methods, The Method of Steepest Descent, Classical Newton's Method, Step Size Determination, Derivative-free Optimization, Concepts of Genetic Algorithms, GA techniques, Simulated Annealing, Random Search, Downhill Simplex Search, Evolutionary Computing, Swarm optimization, Green Computing, Big data mining.	**[9 HOURS]**
4	Neural Networks & Deep Learning: Artificial Neural Network, Supervised Learning Neural Networks, Perceptrons and its limitations, Adaline, Back propagation learning algorithm Mutilayer Perceptrons, Radial Basis Function Networks, Unsupervised Learning Neural Networks, Deep Neural Network, Convolutional Neural Network, Competitive Learning Networks, Kohonen Self- Organizing Networks, Learning Vector Quantization, Hebbian Learning, Hop-field networks.	**[9 HOURS]**
5	Neuro Fuzzy Modelling: Adaptive Neuro-Fuzzy Inference Systems, Architecture, Hybrid Learning Algorithm, Learning Methods that Cross-fertilize ANFIS and RBFN, Coactive Neuro Fuzzy Modeling, Framework Neuron Functions for Adaptive Networks, Neuro Fuzzy Spectrum. Introduction to Neuro Fuzzy Control	**[9 HOURS]**

TEXT BOOKS:

1. **Fuzzy Logic with Engineering Applications, Timothy J. Ross**, McGraw-Hill, 1997/2010.
2. **Genetic Algorithms: Search, Optimization and Machine** Learning, Davis E. Goldberg, Addison Wesley, N.Y.,1989.
3. **Neural Networks: A Comprehensive Foundation**, Simon Haykin. Prentice Hall
4. **Neural Network Design, M. T. Hagan, H. B. Demuth, Mark Beale**, Thomson Learning, Vikash Publishing House.
5. Neural Networks, Fuzzy Logic and Genetic Algorithms, S. Rajasekaran and G.A.V.Pai, PHI, 2003.

COURSE OUTCOMES (COs)

On completion of the course, students are able to :

CO1	Recognize and depict soft computing methods and their roles to build intelligent Systems.
CO2	Apply fuzzy principles and thinking to deal with vulnerability and tackle real-time Issues.
CO3	Apply genetic algorithms to generate optimized results for a particular problem.
CO4	Apply neural networks to design classification problems.
CO5	Evaluate the solutions by various soft computing approaches for a given problem.
CO6	compare solutions by various soft computing approaches for a given problem. (

Semester End Examination (SEE) Question paper pattern:

1. Eight questions are to be set covering entire syllabus. **(student shall answer 5 full question)**

   Q1 and Q2 are compulsory from UNIT 1 and UNIT 2 respectively.

   Q3 and Q4 from UNIT 3, Q5 and Q6 from UNIT 4, Q7 and Q8 from UNIT 5.
2. There shall be a maximum of three sub divisions under each question. Numerical problems shall be set wherever possible
3. Each question will carry **14 marks.**

18CSDE742 - INTERNET ROUTING ARCHITECTURE AND PROTOCOLS

ELECTIVE GROUP : 4 **CREDITS: 03**
SEMESTER : 07 **L:T:P – 3:0:0**
IA/UE : 30/70 **CONTACT HRS/WEEK : 03**

Course Objective:

1.	Recognize terminology used in describing current network components, judge the need for a specific component in a typical system's design process.
2.	Choose an appropriate solution for a typical network related problem and can successfully integrate other components of the system with the underlying network.
3.	To familiarize himself with most used Internet Protocols and their functioning.

Module	COURSE CONTENTS	HOURS ALLOTTED
1	**Routing in IP Networks** Routers, Networks, and Routing Information: Some Basics-Routing Table Communication of Routing Information -Static Routes- Routing Information Protocol, Version 1 (RIPv1), Communication and Message Format , General Operation , Is RIPv1 Good to Use? Routing Information Protocol Version 2 (RIPv2) - Interior Gateway Routing Protocol (IGRP)-Enhanced Interior Gateway Routing Protocol (EIGRP)- Packet Format ,Route Redistribution.	**[9 HOURS]**
2	**Routing Protocols-Framework and Principles:** Routing Protocol, Routing Algorithm, and Routing Table, Routing Information Representation and Protocol Messages - Distance Vector Routing Protocol: Why Timers Matter, Can We Avoid Loops? Distance Vector Protocol Based on Diffusing Computation with Coordinated Update -Link State Routing Protocol -Path Vector Routing Protocol: Basic Principle , Path Vector with Path Caching, Link Cost ,ARPANET Routing Metrics.	**[9 HOURS]**
3	**Internet Routing Architectures** Internet Routing Evolution Addressing and Routing: - Current Architectural View of the Internet Customers and Providers, Peering and Tiering, and Exchange Points - A Representative Architecture - Customer Traffic Routing: A Geographic Perspective, Size and Growth - Allocation of IP Prefixes and AS Number - Policy-Based Routing - Traffic Engineering Implications- Internet Routing Instability.	**[9 HOURS]**
4	**Quality of Service Routing** QoS Attributes-Adapting Shortest Path and Widest Path Routing -Update Frequency, Information Inaccuracy, and Impact on Routing - Lessons from Dynamic Call Routing in the Telephone Network-Heterogeneous Service, Single-Link Case -A General Framework for Source-Based QoS Routing with Path Caching-Routing Protocols for QoS Routing -QOSPF: Extension to OSPF for QoS Routing -ATM PNNI	**[9 HOURS]**
5	**MPLS and GMPLS**	**[9 HOURS]**

	Traffic Engineering Extension to Routing Protocols-Multiprotocol Label Switching - Labeled Packets and LSP Label Distribution - RSVP-TE for MPLS Traffic Engineering Extensions to OSPF and IS-IS Generalized MPLS -GMPLS Labels -Label Stacking and Hierarchical LSPs: MPLS/GMPLS - RSVP-TE for GMPLS-Routing Protocols in GMPLS - Control and Data Path Separation and Link Management Protocol -MPLS Virtual Private Networks-BGP/MPLS IP VPN -Layer 2 VPN.	

TEXT BOOKS:
"**Network Routing -Algorithms Protocols and Architectures" Deep Medhi, KarthikRamasamy, 2nd Edition, 20**17

COURSE OUTCOMES (COs)

On completion of the course, students are able to :

CO1	Understand the data traversal through various cross points (routers) in the network
CO2	Able to describe the architecture of the Internet.
CO3	Explain the layered architecture, internetworking devices and internet protocol stack.
CO4	Analyze the requirements for a given organizational structure and select the most appropriate networking architecture and technologies.
CO5	Examine the topological and routing strategies for an IP based networking infrastructure
CO6	Describe IP switching and the operation of MPLS

Semester End Examination (SEE) Question paper pattern:

1. Eight questions are to be set covering entire syllabus. **(student shall answer 5 full question)**

   Q1 and Q2 are compulsory from UNIT 1 and UNIT 2 respectively.

   Q3 and Q4 from UNIT 3, Q5 and Q6 from UNIT 4, Q7 and Q8 from UNIT 5.
2. There shall be a maximum of three sub divisions under each question. Numerical problems shall be set wherever possible
3. Each question will carry **14 marks.**

18CSDE743- SOCIAL NETWORKS ANALYTICS

ELECTIVE GROUP : 4 CREDITS: 03
SEMESTER : 07 **L:T:P – 3:0:0**
IA/UE : 30/70 **CONTACT HRS/WEEK : 03**

Course Objective:

1.	To understand the concepts of Social networks and Web Social Networks
2.	To appreciate the modeling and visualizing techniques associated with Social Networks
3.	To understand the different techniques used to mine communities from Web Social Networks
4.	To appreciate concepts of evolution and prediction in Social Networks

Module	COURSE CONTENTS	HOURS ALLOTTED
1	**INTRODUCTION** Introduction to Web - Limitations of current Web – Development of Semantic Web – Emergence of the Social Web – Statistical Properties of Social Networks -Network analysis – Development of Social Network Analysis - Key concepts and measures in network analysis – Discussion networks	**[7 HOURS]**
2	**MODELING AND VISUALIZATION** Blogs and online communities - Web-based networks. Visualizing Online Social Networks - A Taxonomy of Visualizations - Graph Representation - Centrality- Clustering - Node-Edge Diagrams - Visualizing Social Networks with Matrix-Based Representations. Node-Link Diagrams - Hybrid Representations - Modelling and aggregating social network data - RandomWalks and their Applications –Use of Hadoop and MapReduce - Ontological representation of social individuals and relationships.	**[10 HOURS]**
3	**MINING COMMUNITIES** Aggregating and reasoning with social network data, Advanced Representations – Extracting evolution of Web Community from a Series of Web Archive Detecting Communities in Social Networks - Evaluating Communities – Core Methods for Community Detection & Mining - Applications of Community Mining Algorithms - Node Classification in Social Networks	**[10 HOURS]**
4	**EVOLUTION** Evolution in Social Networks – Framework - Tracing Smoothly Evolving Communities – Models and Algorithms for Social Influence Analysis - Influence Related Statistics - Social Similarity and Influence - Influence Maximization in Viral Marketing - Algorithms and Systems for Expert Location in Social Networks Expert Location without Graph Constraints - with Score Propagation – Expert Team	**[9 HOURS]**

	Formation - Link Prediction in Social Networks - Feature based Link Prediction - Bayesian Probabilistic Models - Probabilistic Relational Models	
5	**TEXT AND OPINION MINING** Text Mining in Social Networks - Opinion extraction Sentiment classification and clustering - Temporal sentiment analysis - Irony detection in opinion mining - Wish analysis - Product review mining – Review Classification – Tracking sentiments towards topics over time	**[9 HOURS]**

TEXT BOOKS:

1 "Social Network Data Analytics", Charu C. Aggarwal, Springer; 2011

"Social Networks and the Semantic Web", Peter Mika, Springer, 1st edition 2007.

REFERENCE BOOK:

1 "Advances in Social Network Mining and Analysis", Giles, Mark Smith, John Yen, Springer, 2010."Computational Social Network Analysis: Trends, Tools and Research Advances", Ajith Abraham, Aboul Ella Hassanien, Vaclav Snivel, Springer, 2009.

COURSE OUTCOMES (COs)

On completion of the course, students are able to :

CO1	Identify the different components of a web social network that can be used for analyzing and Mining
CO2	Identify the different data structures and graph algorithms that can be used for web social network mining
CO3	Build a social network data set from existing social networking sites
CO4	Design an application that uses various aspects of Social Network Mining to improve its functionality and to harvest information available on the web to build recommender systems
CO5	Recommend Social Network data using MapReduce paradigm
CO6	Analyze social media data using appropriate data/web mining techniques

Semester End Examination (SEE) Question paper pattern:

1. Eight questions are to be set covering entire syllabus. **(student shall answer 5 full question)**

   Q1 and Q2 are compulsory from UNIT 1 and UNIT 2 respectively.

   Q3 and Q4 from UNIT 3, Q5 and Q6 from UNIT 4, Q7 and Q8 from UNIT 5.
2. There shall be a maximum of three sub divisions under each question. Numerical problems shall be set wherever possible
3. Each question will carry **14 marks.**

18CSDE744 SOFTWARE RELIABILITY

ELECTIVE GROUP : 4 **CREDITS: 03**
SEMESTER : 07 **L:T:P – 3:0:0**
IA/UE : 30/70 **CONTACT HRS/WEEK : 03**

Course Objective:

1.	To learn about the engineering techniques for developing and maintaining reliable software systems.
2.	To measure the reliability of software systems
3.	To understand about fault prevention, fault removal, fault tolerance and failure forecasting in software systems
4.	To learn different time dependent and time independent software reliability models and design reliability models for software systems

Module	COURSE CONTENTS	HOURS ALLOTTED
1	**Introduction** Defining Software Reliability, Software Reliability Attributes and Specification, Concept of Defects, Faults, Failures, Defect Rate and Reliability, Defect Prevention, Reduction, and Containment, Overview of Different Types of Software Review, Introduction to Measurement and Inspection Process, Documents and Metrics.	**[9 HOURS]**
2	**Software Reliability Metrics** Collection of fault and failure data, Measurement of internal and external product attributes, Customer Problems Metric, Customer Satisfaction Metrics, In-Process Quality Metrics: Defect Arrival Pattern, Phase-Based Defect Removal Pattern, Defect Removal Effectiveness, Metrics for Software Maintenance, Software Reliability indicators, Software Reliability Metrics, Static Code Metrics, Dynamic Metrics.	**[9 HOURS]**
3	**Software Reliability Assessment Models** Basics of Reliability Theory, Software Reliability Problem, Modeling Process, Software Reliability Models, Parametric Reliability Growth Models, The Rayleigh Model, Exponential Distribution and Software Reliability Growth Models, Software Quality Assessment Models: Hierarchical Model of Software Quality Assessment.	**[9 HOURS]**
4	**Software Reliability Allocation Models** Software Reliability Allocation Models, Criteria for Model Evaluation, Optimal Reliability Allocation, Quality Planning and Control, Quality Improvement Process, Evolution of Software Quality Assurance (SQA), Major SQA Activities, Major SQA Issues, Zero Defect Software.	**[9 HOURS]**
5	**Software Reliability Techniques** Reliability Techniques: Trending Reliability Techniques, Predicting Reliability Techniques, Error Seeding, Failure Rate, Curve Fitting, Reliability Growth, Models and Tools: Study of tools like CASRE, SARA,	**[9 HOURS]**

	SMERFS.	

TEXT BOOKS:

1 "**Software Reliability Engineering**", John Musa, McGraw-Hill

"Software Metrics: A Rigorous and Practical Approach" Fenton, and Pfleeger, International Thomson Computer Press

1 Software Quality Engineering, Jeff Tian, (SQE), Wiley **Metrics and Models in Software Quality Engineering, Stephen H. Kan, Addison-Wesley**

COURSE OUTCOMES (COs)

On completion of the course, students are able to :

CO1	Understanding the fundamental concepts of Software Reliability
CO2	Discussing the basics of Software Reliability Modeling
CO3	Discuss the concepts of Comparison Criteria
CO4	Illustrate the concepts of Measurements in Software Engineering.
CO5	Use the Measurement of Internet Product Attributes and Quality Management Models
CO6	Design reliability models for software systems

Semester End Examination (SEE) Question paper pattern:

1. Eight questions are to be set covering entire syllabus. **(student shall answer 5 full question)**

   Q1 and Q2 are compulsory from UNIT 1 and UNIT 2 respectively.

   Q3 and Q4 from UNIT 3, Q5 and Q6 from UNIT 4, Q7 and Q8 from UNIT 5.
2. There shall be a maximum of three sub divisions under each question. Numerical problems shall be set wherever possible
3. Each question will carry **14 marks.**

2018 Regulation Syllabus

Semester – VIII
Open Electives offered by Department of CSE
DATA STRUCTURES AND ALGORITHMS

OPEN ELECTIVE : 18CS0E01 **CREDITS: 03**
SEMESTER : **L:T:P – 3:0:0**
IA/UE : 30/70 **CONTACT HRS/WEEK:03**

Course Objective:

1.	Demonstrate familiarity with major algorithms and data structures.
2.	Analyze the performance of algorithms.
3.	Choose the appropriate data structure and algorithm design method for a specified application.
4.	Determine which algorithm or data structure to use in different scenarios.
5.	To prepare students to get full use of code reusability using Generic programming while coding

Module	COURSE CONTENTS	HOURS ALLOTTED
1	**Introduction to Data Structures**: Introduction and Classification of Data structures A**symptotic Notations.** Big-oh, Big-omega, Theta, Little-oh, Little-omega notations, Properties of Asymptotic Notations. **Analysis of Algorithms**: Analysis of Iterative and Recursive Algorithms, Abstract Data Types (ADTs)	**[6 HOURS]**
2	**Stacks:** Array Implementation and Applications (conversion of infix to postfix, evaluation of postfix expression). **Queues**: Array Implementation, Operations and Applications of Queues, Circular Queues **Linked List**: Implementation of Stacks, Queues, Search and Update Operations on Varieties of Linked Lists [singly, doubly]	**[12 HOURS]**
3	**Trees**: Introduction to Trees, Implementation of Trees, Binary Trees, Tree Traversals with an Application, Binary Search Trees (BSTs), Operations on BSTs. **Priority Queues**: Priority Queue ADT, Binary Heap Implementation and Applications of Priority Queues	**[10 H[10 HOURS]OURS]**
4	**Sorting Algorithms**: Merge Sort, Quick Sort, Heap Sort	

	Graph Algorithms – 1 Graphs and their Representations, Graph Traversal Techniques: Breadth First Search (BFS) and Depth First Search (DFS), Applications of BFS and DFS	
5	**Graph Algorithms – 2** Minimum Spanning Trees (MST), Prim's and Kruskal's algorithms for MST, Dijkstra's Algorithm for Single Source Shortest Paths	**[7 HOURS]**

TEXT BOOKS/ REFERENCES

1. *Data Structures and Algorithm Analysis in C++,* Mark Allen Weiss, Third Edition, 2006, Pearson Education
2. *Introduction to Algorithms,* Thomas H. Cormen, Charles E. Leiserson, Ronald L. Rivest and Clifford Stein, Second Edition, 2009, PHI
3. *Fundamentals of Computer Algorithms,* Ellis Horowitz, SartajSahni and Sanguthevar Rajasekaran, Second Edition 2011

COURSE OUTCOMES (COs)

On completion of the course, students are able to :

CO1	To Implement / Design suitable data structures as required in C programs.
CO2	To construct the programs for implementing stacks, queues and their applications.
CO3	To develop the programs to implement various operations of linked lists and their applications.
CO4	To make use of tree concepts to implement programs for their applications.
CO5	To apply Algorithm for solving problems like sorting, searching, insertion and deletion of data to a programs by choosing appropriate data structures to solve a problem.
CO6	To identify and use a suitable data structure and algorithm to solve a real world problem

Semester End Examination (SEE) Question paper pattern:

1. Eight questions are to be set covering entire syllabus. **(student shall answer 5 full question)**

   Q1 and Q2 are compulsory from UNIT 1 and UNIT 2 respectively.

   Q3 and Q4 from UNIT 3, Q5 and Q6 from UNIT 4, Q7 and Q8 from UNIT 5.
2. There shall be a maximum of three sub divisions under each question. Numerical problems shall be set wherever possible
3. Each question will carry **14 marks.**

PYTHON PROGRAMMING

OPEN ELECTIVE : 18CS0E02 **CREDITS: 03**
SEMESTER : **L:T:P – 3:0:0**
IA/UE : 30/70 **CONTACT HRS/WEEK:03**

Course Objective:

1.	To know the basics of Python programming
2.	To read and write simple Python programs.
3.	To develop Python programs with conditionals and loops.
4.	To define Python functions and call them.
5.	To use Python data structures –- lists, tuples, dictionaries.
6.	To understand the basics of NumPy, SCIPY and MATPLOT

Module	COURSE CONTENTS	HOURS ALLOTTED
1	**DATA, EXPRESSIONS, STATEMENTS** Python interpreter and interactive mode; values and types: int, float, boolean, string, and list; variables, expressions, statements, tuple assignment, precedence of operators, comments; modules and functions, function definition and use, flow of execution, parameters and arguments	**[9 HOURS]**
2	**CONTROL FLOW, FUNCTIONS AND STRING** Conditionals: Boolean values and operators, conditional (if), alternative (if-else), chained conditional (if-elif-else); Iteration: state, while, for, break, continue, pass; Functions: return values, parameters, local and global scope, function composition, recursion; Strings: string slices, immutability, string functions and methods, string module; Lists as arrays.	**[9 HOURS]**
3	**LISTS, TUPLES, DICTIONARIES** Lists: list operations, list slices, list methods, list loop, mutability, aliasing, cloning lists, list parameters; Tuples: tuple assignment, tuple as return value; Dictionaries: operations and methods; advanced list processing – list comprehension;	**[9 HOURS]**
4	**FILES, MODULES, PACKAGES** Files and exception: text files, reading and writing files, format operator; command line arguments, errors and exceptions, handling exceptions, modules, packages;	**[9 HOURS]**
5	**INTRODUCTION TO NUMPY, SCIPY AND MATPLOT** NUMPY- SCIPY – MATPLOT	**[9 HOURS]**

TEXT BOOKS

1. "Introduction to Python for Science and Engineering", David J Pine CRC press publication, 2019
2. "Introduction to Python Programming", Gowrishankar S., Veena A. 2019

REFERENCES

1. "Think Python: How to Think Like a Computer Scientist", Allen B. Downey, 2nd edition, Updated for Python 3, Shroff/O'Reilly Publishers, 2016 (http://greenteapress.com/wp/thinkpython/)
2. Introduction to Programming in Python: An Inter-disciplinary Approach, Robert Sedgewick, Kevin Wayne, Robert Dondero, — Pearson India Education Services Pvt. Ltd., 2016.
3. Introduction to Computation and Programming Using Python, John V Guttag,, Revised and expanded Edition, MIT Press , 2013.
4. Exploring Python , Timothy A. Budd, Mc-Graw Hill Education (India) Private Ltd.,, 2015.
5. Fundamentals of Python: First Programs, Kenneth A. Lambert, CENGAGE Learning, 2012.
6. Introduction to Computer Science using Python: A Computational Problem-Solving Focus Charles Dierbach, —, Wiley India Edition, 2013.

COURSE OUTCOMES (COs)

On completion of the course, students are able to :

CO1	Demonstrate programs using simple Python statements, expressions and data types .
CO2	Explain control flow, functions and String concept in Python for solving problems.
CO3	Utilize Python data structures – lists, tuples & dictionaries for representing compound data.
CO4	Make use of files, exception, modules and packages in Python for solving problems.
CO5	Utilize the NUMPY and scipy library to solve the machine learning problem
CO6	Apply python's powerful plotting library matplot to visualize your data

Semester End Examination (SEE) Question paper pattern:

1. Eight questions are to be set covering entire syllabus. **(student shall answer 5 full question)**

   Q1 and Q2 are compulsory from UNIT 1 and UNIT 2 respectively.

   Q3 and Q4 from UNIT 3, Q5 and Q6 from UNIT 4, Q7 and Q8 from UNIT 5.
2. There shall be a maximum of three sub divisions under each question. Numerical problems shall be set wherever possible
3. Each question will carry **14 marks.**

ARTIFICIAL INTELLIGENCE

OPEN ELECTIVE : 18CS0E03 **CREDITS: 03**
SEMESTER : **L:T:P – 3:0:0**
IA/UE : 30/70 **CONTACT HRS/WEEK:03**

Course Objective:

1.	Study the concepts of Artificial Intelligence and intelligent system.
2.	Learn the methods of solving problems using Artificial Intelligence.

Module	COURSE CONTENTS	HOURS ALLOTTED
1	INTRODUCTION Introduction–Definition - Future of Artificial Intelligence – Characteristics of Intelligent Agents– Typical Intelligent Agents – Problem Solving Approach to Typical AI problems.	**[9 HOURS]**
2	INTELLIGENT AGENTS AND KNOWLEDGE REPRESENTATION Agents and Environments – Good Behavior: The concepts of Rationality – The Nature of Environments – The Structure of Agents – Knowledge Representation – Object Oriented Approach – Semantic Nets – Frames – Semantic Web – Ontology.	**[9 HOURS]**
3	SEARCH TECHNIQUES Problem Solving by Search – Uninformed Search – Searching with Costs – Informed State Space Search – Heuristic Search: – Problem Reduction Search – Game Search – Constraint Satisfaction Problems.	**[9 HOURS]**
4	ARTIFICIAL INTELLIGENCE PLANNING Classical Planning – Partial Order Planning – Graph Plan and SAT Plan – Hierarchical Planning – Planning and Acting in Nondeterministic Domains – Multiagent Planning.	**[9 HOURS]**
5	LISP AND PROLOG : CASE STUDIES Study of LISP and PROLOG–Study of facts, objects, predicates and variables in PROLOG–Study of Rules and Unification in PROLOG–Write a prolog program to maintain family tree–prolog for medical diagnosis–fact for the statements using PROLOG–Implement waterjug problem using LISP–Library Management System using PROLOG/LISP–8-Puzzle problem using BFS	**[9 HOURS]**

TEXT BOOKS:

1. "**Artificial Intelligence – A Modern Approach**", Stuart J. Russell, Peter Norvig, Third Edition, Pearson Education, 2015.

2. **Prolog: Programming for Artificial Intelligence, Bratko,** — Fourth edition, Addison-Wesley Educational Publishers Inc., 2011

REFERENCES:

1. **Artificial Intelligence: A Systems Approach**(Computer Science M. Tim Jones, —)||, Jones and Bartlett Publishers, Inc.; First Edition, 2008

COURSE OUTCOMES (COs)

On completion of the course, students are able to :

CO1	Understand the role of knowledge representation, problem solving, and learning in intelligent-system engineering.
CO2	Explain the basic knowledge representation, problem solving, and learning methods of Artificial Intelligence.
CO3	Understand different techniques and methodologies available for knowledge acquisition
CO4	Select a search algorithm for a problem and estimate its time and space complexities
CO5	Differentiate between different knowledge representation techniques and describe methods of knowledge acquisition and extraction
CO6	Analyze the development process of expert system through various case studies

Semester End Examination (SEE) Question paper pattern:

1. Eight questions are to be set covering entire syllabus. **(student shall answer 5 full question)**

   Q1 and Q2 are compulsory from UNIT 1 and UNIT 2 respectively.

   Q3 and Q4 from UNIT 3, Q5 and Q6 from UNIT 4, Q7 and Q8 from UNIT 5.
2. There shall be a maximum of three sub divisions under each question. Numerical problems shall be set wherever possible
3. Each question will carry **14 marks.**

OBJECT ORIENTED PROGRAMMING USING JAVA

OPEN ELECTIVE : 18CS0E04 **CREDITS: 03**
SEMESTER : **L:T:P – 3:0:0**
IA/UE : 30/70 **CONTACT HRS/WEEK:03**

Course Objective:

1.	To understand Object Oriented Programming concepts and basic characteristics of Java.
2.	To know the principles of packages, inheritance and interfaces
3.	To explore exception handling mechanisms and to develop applications using threads
4.	To explore exception handling mechanisms and to develop applications using threads
5.	To Develop applications using JDBC connectivity

Module	COURSE CONTENTS	HOURS ALLOTTED
1	**Object Oriented Programming Concepts**- Abstraction – objects and classes - Encapsulation- Inheritance - Polymorphism- OOP in Java: Characteristics of Java – The Java Environment **-** Java Source File - Structure – Compilation. Fundamental Programming Structures in Java – Defining classes in Java – constructors, methods -access Specifiers - static members -Comments, Data Types, Variables, Operators, Control Flow, Arrays. Collections in java.	**[9 HOURS]**
2	**Inheritance** – Super classes- sub classes –Protected members – constructors in sub classes- the Object class – abstract classes and methods- final methods and classes – Interfaces – defining an interface, implementing interface, differences between classes and interfaces and extending interfaces, Inner classes. **Packages:** Creating and Importing packages	**[9 HOURS]**
3	**Exceptions** - exception hierarchy - throwing and catching exceptions – built-in exceptions, creating user defined exceptions. **Multithreading**: Differences between multi-threading and multitasking, thread life cycle, creating threads, synchronizing threads, Inter-thread communication.	**[9 HOURS]**
4	***Event Driven Programming:*** Graphics programming - Frame – Components - working with 2D shapes - Using color, fonts, and images - Basics of event handling - event handlers - adapter classes - actions - mouse events - AWT event hierarchy - Introduction to Swing – layout management - Swing Components – Text Fields , Text Areas – Buttons- Check Boxes – Radio Buttons – Lists- choices- Scrollbars – Windows – Menus – Dialog Boxes.	**[9 HOURS]**

5	**JDBC:** The Concept of JDBC, JDBC Driver Types, JDBC Packages, A Brief Overview of the JDBC process; Database Connection; Associating the **JDBC/ODBC** Bridge with the Database; Statement Objects; Result Set; Transaction Processing; Metadata, Data types; Exceptions. **Case Study/Mini-Project** 1. To build an Android application for managing contacts using Android Studio, Java and SQLite3. 2. To build a simple, fun, interactive brain training android game (Cognitive Games using Java). 3. To Develop a Java GUI application to implement the Breakout Ball Game	**[9 HOURS]**

TEXT BOOKS/ REFERENCES

1. "Java The complete reference", Herbert Schildt, 8th Edition, McGraw Hill Education, 2011
2. "J2EE - The Complete Reference ", Jim Keogh :–Tata McGraw Hill, 2007.

COURSE OUTCOMES (COs)

On completion of the course, students are able to :

CO1	Illustrate the concepts of Object Oriented programming
CO2	Demonstrate the concepts of inheritance and interfaces through programming
CO3	Construct Java applications to demonstrate exception handling mechanisms
CO4	Implement multithreading with real world examples
CO5	Analyze the event driven programs using swings
CO6	Construct applications using JDBC connectivity

Semester End Examination (SEE) Question paper pattern:

1. Eight questions are to be set covering entire syllabus. **(student shall answer 5 full question)**

   Q1 and Q2 are compulsory from UNIT 1 and UNIT 2 respectively.

   Q3 and Q4 from UNIT 3, Q5 and Q6 from UNIT 4, Q7 and Q8 from UNIT 5.
2. There shall be a maximum of three sub divisions under each question. Numerical problems shall be set wherever possible
3. Each question will carry **14 marks.**

SOFTWARE PROJECT MANAGEMENT

OPEN ELECTIVE : 18CS0E05 **CREDITS: 03**
SEMESTER : **L:T:P – 3:0:0**
IA/UE : 30/70 **CONTACT HRS/WEEK:03**

Course Objective:

1.	To impart practical knowledge of the skills and techniques used to manage information systems projects.
2.	To provide the insight of skills required to implement information systems. Management of time, scope and cost are vital, as are the "soft" skills of managing the team and communicating with the stakeholders.

Module	COURSE CONTENTS	HOURS ALLOTTED
1	Introduction to Software Project Management: Introduction to Project and Project Management, Reasons for IT project failure, Triple constraint of IT project management, Management spectrum of project, Overview of project life cycle models, Project manager skills and job description conceptualization and initiation of IT project, Business case. Project Charter: Introduction, Project management process and their correlation with project life cycle phases, Introduction to Project Integration management and seven processes, Project Charter. Project Scope Management: Introduction, Processes of scope management	**[9 HOURS]**
2	**Project Scope Management:** Introduction, Processes of scope management. **Project Human Resource Management:** Introduction, Organizational structure – Function, Project and Matrix, Keys to managing people motivation theories and improving effectiveness, Project team selection. **Project Time and Cost Management :** Introduction, Development of project schedule, CPM and PERT, Activities their sequencing and dependencies, Project network diagrams, Development of Gantt Charts, Earned Value Management, Introduction to Constructive Cost Model (COCOMO).	**[9 HOURS]**
3	**Project Risk Management:** Introduction, Risk Management Process, Risk Identification for IT projects, Qualitative and Quantitative approaches to Risk Analysis, Risk Strategies, Risk Monitoring and Control, Risk Response and Evaluation Project Quality Management.	**[9 HOURS]**
4	**Project Communication Management:** Introduction, Project	**[9 HOURS]**

	Communication Plan, Project metrics, Information distribution, Performance Reporting. **Project Change Management:** Introduction, Impact of change, Change as a process, Change Management plan, dealing with resistance and conflict, Configuration management. **Project Procurement Management:** Introduction, Processes Planning Purchases and Acquisition, Contracting, Request Seller Responses, Select Sellers, Contract Administration, Contract Closure, Outsourcing of products and services.	
5	**Project Leadership and Ethics:** Introduction, Project Leadership, Modern approaches, Styles of leadership, Ethical leadership, making sound ethical decisions in the situations of conflict. **Closure of a Project:** Introduction, Project implementation, Administrative closure, Project Evaluation.	**[9 HOURS]**

TEXT BOOKS

1. "Information Technology Project Management", Jack T Marchewka, (International Student Version), Wiley India.
2. "Software Project Management", Bob Hughes, Mike Cotterell, Rajib Mall, Mc GrawHill.

REFERENCES

1. Project Management in IT , Kathy Schwalbe, , India Edition, Cengage Learning.
2. Software Project Management in Practice, Pankaj Jalote, Pearson, Education Asia

COURSE OUTCOMES (COs)

On completion of the course, students are able to :

CO1	understand the basic concepts and issues of software project management
CO2	create effective plan for real world software project and implement the project plans with available resources
CO3	select and employ mechanisms for tracking the software projects
CO4	Exhibit the knowledge in change, procure and communication management in projects
CO5	identify various activities required to complete software projects
CO6	Conduct the activities necessary to successfully complete and close the software projects

Semester End Examination (SEE) Question paper pattern:

1. Eight questions are to be set covering entire syllabus. **(student shall answer 5 full question)**
   Q1 and Q2 are compulsory from UNIT 1 and UNIT 2 respectively.
   Q3 and Q4 from UNIT 3, Q5 and Q6 from UNIT 4, Q7 and Q8 from UNIT 5.
2. There shall be a maximum of three sub divisions under each question. Numerical problems shall be set wherever possible
3. Each question will carry **14 marks.**

.

FUNDAMENTALS OF DATABASE SYSTEMS

OPEN ELECTIVE : 18CS0E06 **CREDITS: 03**
SEMESTER : **L:T:P – 3:0:0**
IA/UE : 30/70 **CONTACT HRS/WEEK:03**

Course Objective:

1.	To have a broad understanding of database concepts and database management system software
2.	To be able to model an application's data requirements using conceptual modeling tools like ER diagrams and design database schemas based on the conceptual model.
3.	To have a high-level understanding of major DBMS components and their functions
4.	To be able to write SQL commands to create tables and indexes, insert/update/delete data, and query data in a relational DBMS.

Module	COURSE CONTENTS	HOURS ALLOTTED
1	**Introduction to Databases** Characteristics of database approach, Advantages of using the DBMS approach, Actors on the scene and workers behind the scene, History of database applications. **Database systems Concepts and Architecture:** Data Models, Schemas, and Instances. Three schema architecture and data independence, database languages, and interfaces, The Database System environment **Conceptual Data Modeling using Entities and Relationships:** Entity types, Entity sets, attributes, roles, and structural constraints, Weak entity types, ER diagrams, examples	**[9 HOURS]**
2	**Relational Model:** Relational Model Concepts, Relational Model Constraints and relational database schemas, Update operations, transactions, and dealing with constraint violations. **Relational Algebra:** Unary and Binary relational operations, additional relational operations (aggregate, grouping, etc.) Examples of Queries in relational algebra.	**[9 HOURS]**
3	**SQL:** SQL data definition and data types, specifying constraints in SQL, retrieval queries in SQL, INSERT, DELETE, and UPDATE	**[9 HOURS]**

	statements in SQL, Additional features of SQL. **SQL : Advances Queries:** More complex SQL retrieval queries, Specifying constraints as assertions and action triggers, Views in SQL, Schema change statements in SQL.	
4	**Internet Applications:** The three-Tier application architecture, The presentation layer, The Middle Tier **Database Application Development:** Accessing databases from applications, An introduction to JDBC, JDBC classes and interfaces, SQLJ, Stored procedures, **Case study: The internet Bookshop**	**[9 HOURS]**
5	**Normalization: Database Design Theory –** Introduction to Normalization using Functional and Multivalued Dependencies: Informal design guidelines for relation schema, Functional Dependencies, Normal Forms based on Primary Keys, Second and Third Normal Forms, Boyce-Codd Normal Form, Multivalued Dependency and Fourth Normal Form, Join Dependencies and Fifth Normal Form.	**[9 HOURS]**

TEXT BOOKS

1. Fundamentals of Database Systems, Ramez Elmasri and Shamkant B. Navathe, 7th Edition, 2017, Pearson.
2. Database management systems, Ramakrishnan, and Gehrke, 3rd Edition, 2014, McGraw Hill

REFERENCES

1. Database System Concepts, Silberschatz Korth and Sudharshan, 6th Edition, Mc-GrawHill, 2013.
2. Database Principles Fundamentals of Design, Implementation and Management, Coronel, Morris, and Rob, Cengage Learning 2012.

COURSE OUTCOMES (COs)

On completion of the course, students are able to :

CO1	Construct Entity-Relationship (ER) model and also to learn different issues in the design and implementation of a Database system.
CO2	Demonstrate by providing solutions through Relational Algebraic expressions and structured query language commands.
CO3	Construct SQL queries for querying and retrieving multiple tuples
CO4	Construct complex SQL queries using Iterators CURSORs and Triggers.
CO5	Demonstrate the working of Internet applications and Database Application

	Development
CO6	Analyze the different normalization techniques by understanding the essential DBMS concepts.

Semester End Examination (SEE) Question paper pattern:

1. Eight questions are to be set covering entire syllabus. **(student shall answer 5 full question)**
   Q1 and Q2 are compulsory from UNIT 1 and UNIT 2 respectively.
   Q3 and Q4 from UNIT 3, Q5 and Q6 from UNIT 4, Q7 and Q8 from UNIT 5.
2. There shall be a maximum of three sub divisions under each question. Numerical problems shall be set wherever possible
3. Each question will carry **14 marks.**

SOFTWARE ENGINEERING AND TESTING

OPEN ELECTIVE : 18CS0E07 **CREDITS: 03**
SEMESTER : **L:T:P – 3:0:0**
IA/UE : 30/70 **CONTACT HRS/WEEK:03**

Course Objective:

1.	To explain the importance of OOSE in Software development.
2.	To explain the students the importance of Requirements Engineering.
3.	To explain the role of UML and Testing in Software Development.

Module	COURSE CONTENTS	HOURS ALLOTTED
1	**Introduction to Object Oriented Software Engineering and Requirements Engineering:** Nature of the Software, Types of Software, Software Engineering Projects, Software Engineering Activities, Software Quality, and Introduction to Object Orientation, Software Process Models- Waterfall Model, and Opportunistic Model, Phased Released Model, Spiral Model, Evolutionary Model, And Concurrent Engineering Model. Domain Analysis, Problem Definition and Scope, Requirements Definition, Types of Requirements, Techniques for Gathering and Analyzing Requirements, Requirement Documents, Reviewing, Managing Change in Requirements.	**[9 HOURS]**
2	**Unified Modeling Language & Use Case Modeling** Introduction to UML, Modeling Concepts, Types of UML Diagrams with Examples; User-Centered Design, Characteristics of Users, Developing Use - Case Models of Systems, Use-Case Diagram, Use-Case Descriptions, Basics of User Interface Design, Usability Principles, User Interfaces	**[9 HOURS]**
3	**Class Design and Class Diagrams** Essentials of UML Class Diagrams, Associations and Multiplicity, Other Relationships, Generalization, Instance Diagrams, Advanced Features of Class Diagrams, Interaction and Behavioral Diagrams: Interaction Diagrams, State Diagrams, Activity Diagrams, Component and Deployment Diagrams.	**[9 HOURS]**
4	**Software Design and Architecture:** Process of Design, Principles Leading to Good Design, Techniques for Making Good Design Decisions, Good Design Document; Pattern Introduction, Design Patterns: Abstraction-Occurrence	**[9 HOURS]**

	Pattern, General Hierarchical Pattern, Play-Role Pattern, Singleton Pattern, Observer Pattern, Delegation Pattern, Adaptor Pattern, Façade Pattern, Immutable Pattern, Read-Only Interface Pattern and The Proxy Pattern; Software Architecture Contents of Architecture Model, Architectural Patterns: Multilayer, Client-Server, Broker, Transaction Processing, Pipe & Filter and MVC Architectural Patterns	
5	**Software Testing** Overview of Testing, Testing Concepts, Testing Activities, Testing Strategies, Unit Testing, Integration Testing, Function Testing, Structural Testing, Class Based Testing Strategies, Use Case/Scenario Based Testing, Regression Testing, Performance Testing, System Testing, Acceptance Testing, Installation Testing, OO Test Design Issues, Test Case Design, Quality Assurance, Root Cause Analysis, Post-Mortem Analysis	**[9 HOURS]**

TEXT BOOKS/

1. Object-Oriented Software Engineering Practical software development using UML and Java, Timothy C. Lethbridge & Robert, Langaniere, Mcgraw-Hill
2. Object-Oriented Software Engineering: Using UML, Patterns and Java, Bernd Bruegge and Allen H. Dutoit, 2nd Edition, Pearson Education Asia.

REFERENCES

1. Software Engineering: A Practitioner's Approach, Roger S Pressman.
2. A Practical Guide to Testing Object-Oriented Software, John D. McGregor; David A. Sykes, Addison-Wesley Professional

COURSE OUTCOMES (COs)

On completion of the course, students are able to :

CO1	Understand the basic concept of object oriented software engineering and Comprehend software development life cycle.
CO2	Analyze and specify software requirements.
CO3	Exhibit the knowledge in software project from requirement gathering to implementation.
CO4	Focus on the fundamentals of modeling a software project using UML
CO5	Apply software design and development techniques
CO6	Analyze and Apply project management techniques for a case study

Semester End Examination (SEE) Question paper pattern:

1. Eight questions are to be set covering entire syllabus. **(student shall answer 5 full question)**
   Q1 and Q2 are compulsory from UNIT 1 and UNIT 2 respectively.
   Q3 and Q4 from UNIT 3, Q5 and Q6 from UNIT 4, Q7 and Q8 from UNIT 5.
2. There shall be a maximum of three sub divisions under each question. Numerical problems shall be set wherever possible
3. Each question will carry **14 marks.**

FUNDAMENTAL OF CLOUD TECHNOLOGY

OPEN ELECTIVE : 18CS0E08 **CREDITS: 03**
SEMESTER : **L:T:P – 3:0:0**
IA/UE : 30/70 **CONTACT HRS/WEEK:03**

Course Objective:

1.	Knowledge of Cloud Computing concepts, technologies, architecture and applications by introducing and researching state-of-the-art in Cloud Computing fundamental issues, technologies, applications and implementations..
2.	Understanding Services, Applications by Type and Virtualization
3.	Managing the Cloud Resource, Scheduling and understating cloud security.

Module	COURSE CONTENTS	HOURS ALLOTTED
1	**Introduction:** Network centric computing and network centric content, Peer-to-peer systems, Cloud Computing: an old idea whose time has come, Cloud Computing delivery models & Services, Ethical issues, Cloud vulnerabilities, Challenges	**[9 HOURS]**
2	**Understanding Services and Applications by Type:**IaaS, PaaS, SaaS and other services.Amazon, Google, Azure & Online Services, open source private clouds. Storage diversity and vendor lock-in, inter cloud, Energy use & ecological impact of data centers, service level and compliance level agreement, Responsibility sharing, user experience, Software Licensing.	**[9 HOURS]**
3	**Cloud Resource Virtualization:** Layering and virtualization, Virtual machine monitors, Virtual machines Performance and security isolation, Full virtualization and paravirtualization, Hardware support for virtualization Case study: *Xen* -a VMM based on paravirtualization, Optimization of network virtualization in *Xen* 2.0, *vBlades* -paravirtualization targeting a *x86-64* Itanium processor, A performance comparison of virtual machines, Virtual machine security, The darker side of virtualization, Software fault isolation.	**[9 HOURS]**
4	**Cloud Resource Management and Scheduling:** Policies and mechanisms for resource management, Applications of control theory to task scheduling on a cloud, Stability of a two-level resource allocation architecture, Feedback control based on dynamic thresholds, Coordination of specialized autonomic	**[9 HOURS]**

	performance managers, A utility-based model for cloud-based web services, Resource bundling.	
5	Combinatorial auctions for cloud resources, Scheduling algorithms for computing clouds. **Storage systems:** Evolution, Storage models, file systems, databases, DFS, General parallel File system. **Cloud security:** Risks, privacy and privacy impacts assessments.	**[9 HOURS]**

TEXT BOOKS/ REFERENCES

1. ***"Cloud Computing: Theory and Practice"***, Dan Marinescu, 1st Edition, MK Publishers, 2013.
2. ***"Cloud Computing: Bible"*,** Barrie Sosinsky, 1st Edition, 2011, Wiley
3. ***" Cloud Computing : A Practical Approach"*** , Anthony T. Velte, Toby J. Velte and Robert Elsenpeter, 1stEdition, McGraw-Hill ,2010

COURSE OUTCOMES (COs)

On completion of the course, students are able to :

CO1	Understand the main concepts, key technologies, strengths, and limitations of cloud computing and the possible applications for state-of-the-art cloud computing.
CO2	Identify the architecture and infrastructure of cloud computing, including SaaS, PaaS, IaaS, public cloud, private cloud, hybrid cloud, etc.
CO3	Explain the core issues of cloud computing such as security, privacy, and interoperability.
CO4	Explore virtualization tools to understand different types of hypervisors and create VM's
CO5	Identify problems, and explain, analyze, and evaluate various cloud computing solutions.
CO6	Attempt to generate new ideas and innovations in cloud computing

Semester End Examination Question paper pattern:

Sl #	**Details**
1.	Eight questions are to be set covering entire syllabus. **(student shall answer 5 full question)** Q1 and Q2 are compulsory from UNIT 1 and UNIT 2 respectively. Q3 and Q4 from UNIT 3, Q5 and Q6 from UNIT 4, Q7 and Q8 from UNIT 5.
2.	There shall be a maximum of three sub divisions under each question. Numerical problems shall be set wherever possible
3.	Each question will carry **14 marks.**